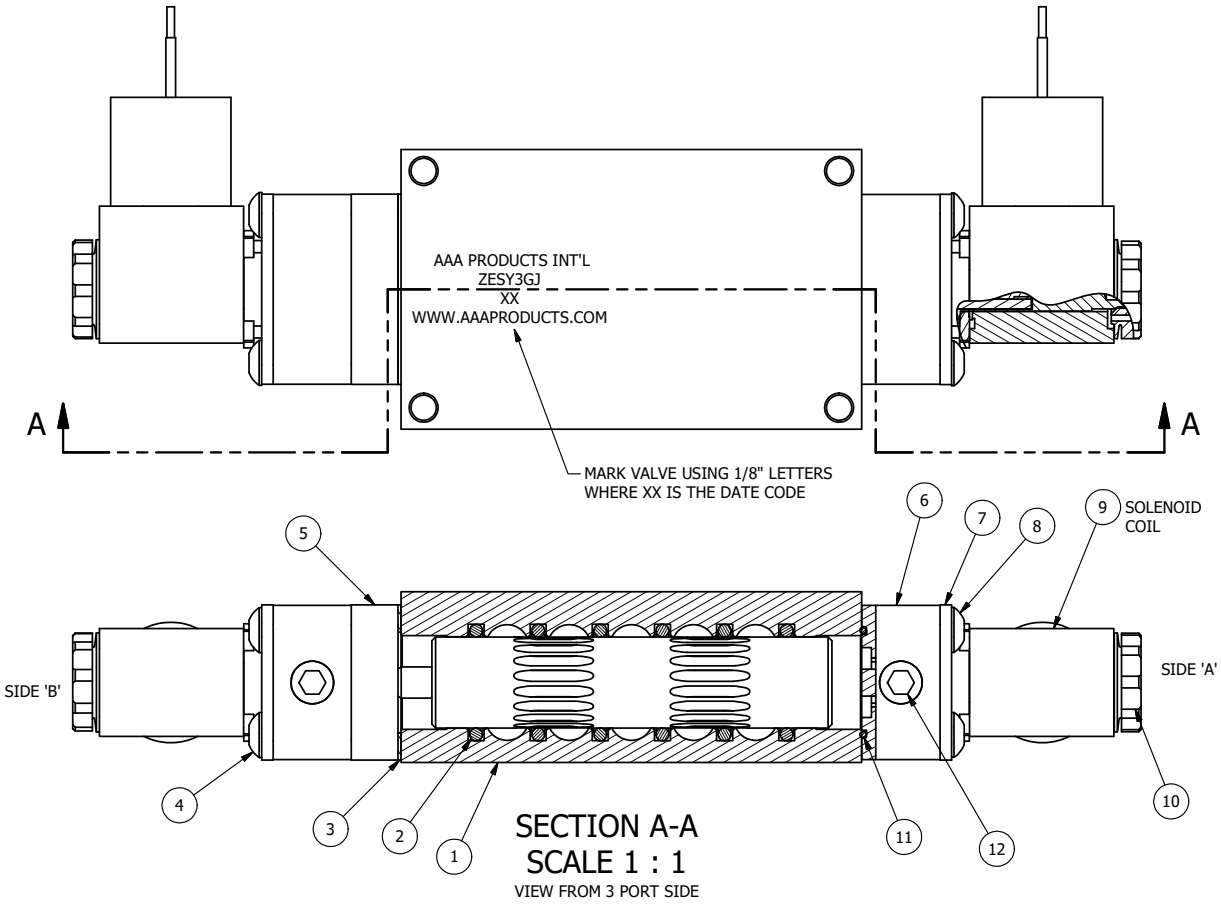

SECTION A-A
SCALE 1 : 1
VIEW FROM 3 PORT SIDE

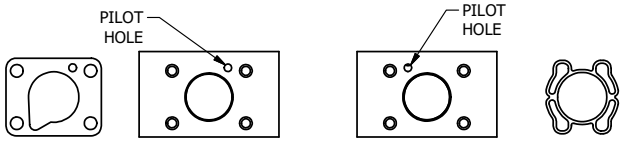

ALIGN PILOT AND HOLE IN GASKET
SIDE B ONLY

ALIGN PILOT AND SLOT IN ADAPTOR
WITH GASKET IN BETWEEN, BOTH SIDES
FOR EXTERNAL PILOT OPERATION - ROTATE ADAPTOR
180 DEGREES. REMOVE 1/8" NPTF PLUG AND
SUPPLY 50-150 PSI TO 1/8" NPTF PILOT PORT IN ADAPTOR.

FLG	QTY	PART NO	DESCRIPTION
12	2	V-19-SS	PLUG, SOCKET PIPE 1/8"-27 NPT, 7/8 TAPER, PLAIN, FLUSH SEAL, STAINLESS STEEL
11	2	EMG3	GASKET - END MOUNT SOLENOID, BUNA-N, 1/4" & 3/8" VALVES
10	2	V-556	NUT, SOLENOID, TOP EXHAUST, KNURLED
9	2	V-600-1	COIL - 1/2 NPTF HUB 120V 50/60HZ, NASS P/N 0561 44.1-00/4984
8	4	V-584-SS	SCREW, 10-24 X 1, BUTTON HEAD SOCKET CAP, 18-8 OR 303 SS
7	2	SEC3-7	PLATE, RE-INFORCEMENT, SOLENOID, STAMPED, 304 STAINLESS
6	2	V-550-1	SOL OPER, END MOUNT, NON-LOCKING O'RIDE
5	1	AY-ZEMY3G	ASSY - SPR CTR, FLOAT CTR SPL, END MOUNT SOLENOID, BRASS, 1/4" & 3/8" VALVES
4	4	V-601-SS	SCREW, 10-24 X 1-1/2, BUTTON HEAD SOCKET CAP, 18-8 SS OR EQUIVQLENT
3	1	ECG3	GASKET - END CAP, 1/4" & 3/8" VALVE
2	6	V-39	O-RING, VITON, STD BODY, 1/4" & 3/8" VALVES
1	1	ZB3-1	BODY - BRASS, UPPER PILOTS (BUTTON BLEEDER), 3/8" SIDE PORT VALVE

NOTES:
1) ALWAYS GIVE VALVE MODEL AND PART NUMBER WHEN ORDERING PARTS.
2) FOR DIFFERENT VOLTAGES OTHER THAN 120/60, REPLACE SOLENOID COIL WITH COIL LISTED IN TABLE BELOW.

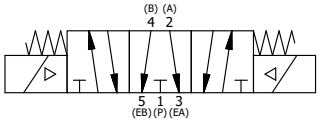

COIL VOLTAGES	
PART NO	REPLACE COIL
ZESY3GJ 240/60	V-600-4
ZESY3GJ 24VDC	V-600-3
ZESY3GJ 12VDC	V-600-2

LIMITS ON DIMENSIONS UNLESS OTHERWISE SPECIFIED
2-PL DECIMAL ± .01
3-PL DECIMAL ± .005
FRACTIONAL ± 1/64
ANGULAR ± 1/2'

AAA PRODUCTS INTERNATIONAL
7114 Harry Hines Blvd
Dallas, TX 75235

DRAWN: RMcKenna DATE: 11/3/2015
CHECKED: KWaite DATE: 11/3/2015
SCALE: 1 : 1 SHEET: 1 OF 1
RELEASED: HWomack DATE: 11/3/2015

TITLE: 3/8" SIDE PORT, DBL SOL, 3 POS, SPR CTR, SOL SHFT, FLOAT CTR SPL, BRASS & SS, MOLD-OVER, 120/60

PART NO.: ZESY3GJ

REV.:

THE INFORMATION CONTAINED WITHIN THIS DOCUMENT IS PROPRIETARY TO AAA PRODUCTS AND MAY NOT BE DISCLOSED WITHOUT PRIOR WRITTEN CONSENT

D:\Engineering\Product\Valves\Assembly\Standard\ESY\DWG\ZESY3GJ.dwg