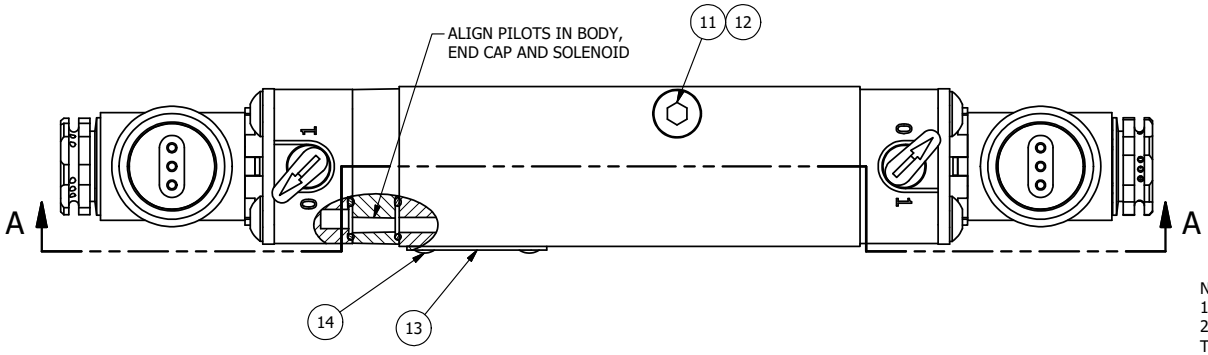

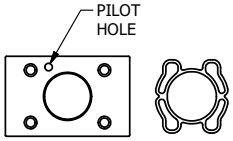

ALIGN PILOT AND SLOT IN ADAPTOR
WITH GASKET IN BETWEEN, BOTH SIDES.
FOR EXTERNAL PILOT OPERATION - ROTATE ADAPTOR
180 DEGREES. REMOVE 1/8" NPTF PLUG AND
SUPPLY 50-150 PSI TO 1/8" NPTF PILOT PORT IN ADAPTOR

NOTES:
1) ALWAYS GIVE VALVE MODEL AND PART NUMBER WHEN ORDERING PARTS.
2) FOR DIFFERENT VOLTAGES OTHER THAN 120/60, REPLACE SOLENOID COIL WITH COIL LISTED IN TABLE BELOW.

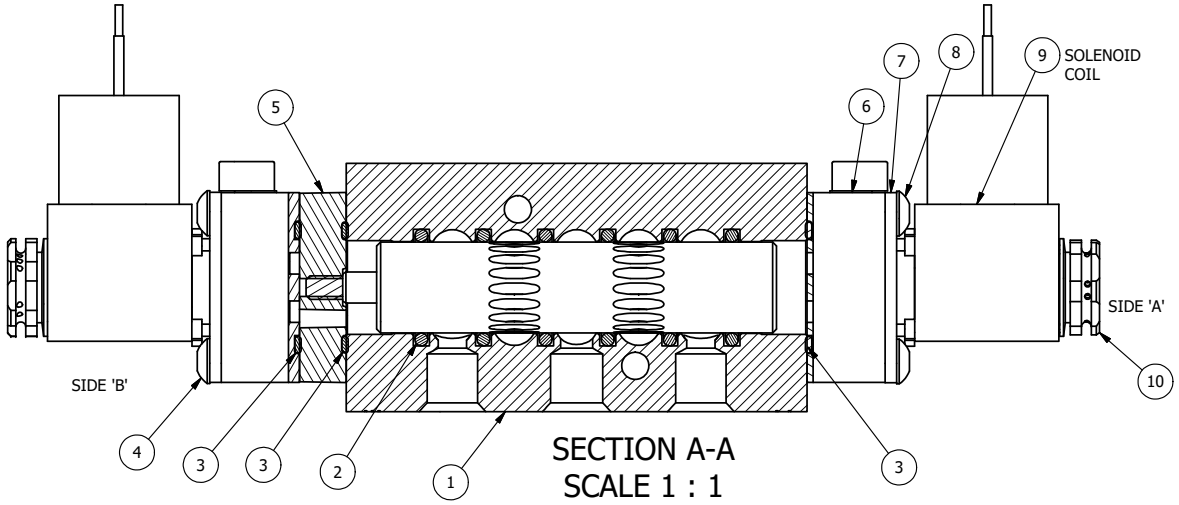

SECTION A-A
SCALE 1 : 1

FLG	QTY	PART NO	DESCRIPTION
15	1	NSPK-2	SUBPLATE MOUNTING KIT NAMUR (2 EA V-566 SCREW, 2 EA V-565 O-RING)
14	2	V-212	SCREW, #2 X 3/16 DRIVE, TYPE U, OVAL HEAD, STAINLESS STEEL
13	1	AN-114	NAMEPLATE, BLANK, FOR VALVES WITH SPRINGS OR DETENTS
12	1	V-548	O-RING, BUNA-N, 70 DURO, 6MM X 1MM, NAMUR PLUG
11	1	V-547	PLUG, 360 HALF HARD BRASS, NAMUR VALVE
10	2	V-562	NUT, SOLENOID, SIDE EXHAUST
9	2	V-600-1	COIL - 1/2 NPTF HUB 120V 50/60HZ, NASS P/N 0561 44.1-00/4984
8	4	V-584	SCREW, 10-24 X 1, BUTTON HEAD SOCKET CAP WITH MICROSPHERE APPLIED TO THREADS.
7	2	SEC3-7	PLATE, RE-INFORCEMENT, SOLENOID, STAMPED, 304 STAINLESS
6	2	V-599-1	SOL OPER, END MOUNT, LOCKING O'RIDE
5	1	AY-EMY3	ASSY - SPR CTR, CLSD CTR SPL, END MOUNT SOLENOID, 1/4" & 3/8" VALVES
4	4	V-601	SCREW, 10-24 X 1-1/2, BUTTON HEAD SOCKET CAP WITH MICROSPHERE ADHESIVE
3	3	EMG3	GASKET - END MOUNT SOLENOID, BUNA-N, 1/4" & 3/8" VALVES
2	6	V-39	O-RING, VITON, STD BODY, 1/4" & 3/8" VALVES
1	1	B2-11E-W	NAMUR INTERFACE, WITH 3/2 CONVERSION, 1/4" VALVE

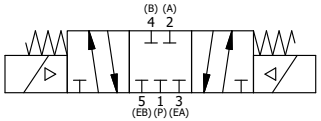

COIL VOLTAGES	
PART NO	REPLACE COIL
NSY2JOC 12VDC	V-600-2
NSY2JOC 24VDC	V-600-3
NSY2JOC 240/60	V-600-4

NO.	DATE	REVISION
A	6/1/2018	ECG3 GASKET TO EMG3, CHNGD END CAP GEOM.

LIMITS ON DIMENSIONS UNLESS OTHERWISE SPECIFIED
2-PL DECIMAL ± .01
3-PL DECIMAL ± .005
FRACTIONAL ± 1/64
ANGULAR ± 1/2'

AAA PRODUCTS INTERNATIONAL
7114 Harry Hines Blvd
Dallas, TX 75235

DRAWN: RMcKenna DATE: 8/31/2018
CHECKED: KWaite DATE: 8/31/2018
SCALE: 1 : 1 SHEET: 1 OF 1
RELEASED: HWomack DATE: 8/31/2018

TITLE: 1/4" NAMUR, DBL SOL, 3 POS, SPR CTR, CLSD CTR SPL, MOLD-OVER, 120/60, LCKNG OVRD, SIDE VENT

PART NO.: NSY2JOC

REV.: A

THE INFORMATION CONTAINED WITHIN THIS DOCUMENT IS PROPRIETARY TO AAA PRODUCTS AND MAY NOT BE DISCLOSED WITHOUT PRIOR WRITTEN CONSENT

D:\Engineering\Product\Valve\Assembly\Standard\SCV\DWG\NSY2JOC.dw