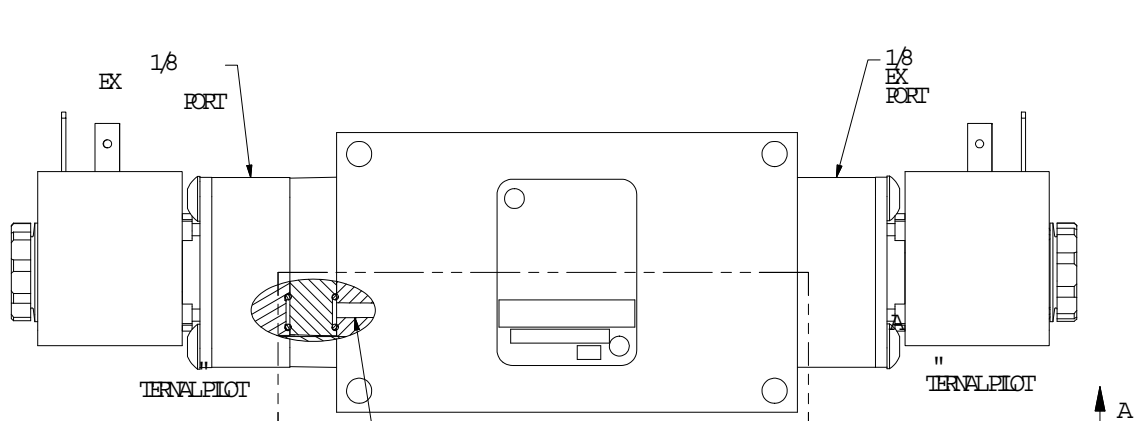

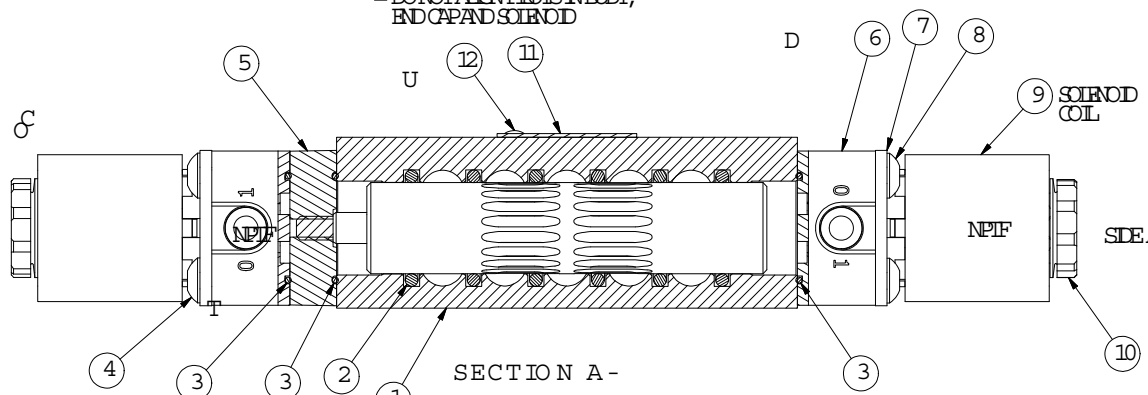

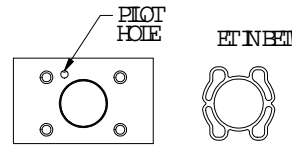

ADAPTOR SHOULD BE INSTALLED AS SHOWN)

1	2	V	S
1	1	A	N
1	2	V	N
9	2	V	C
8	4	V	S
7	2	S	P
6	2	V	S
5	1	A	A
4	4	V	S
3	3	E	G
2	6	V	O
1	1	B	B
F	Q	P	D

NOTES:
1) ALWAYS GIVE VALVE MODEL AND PART NUMBER WHEN ORDERING PARTS.
2) FOR DIFFERENT VOLTAGES OTHER THAN 120/60, REPLACE SOLENOID COIL WITH COIL LISTED IN TABLE BELOW.

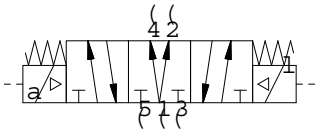

SPR CTR, SOL SHFT, REGEN CTR SPL,
HIGH TEMP COI, 120/60, EX