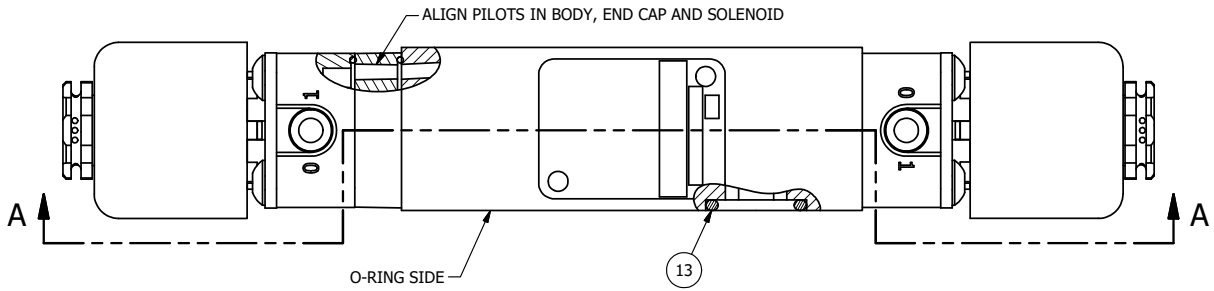


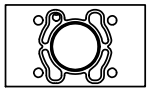

POSITION GASKET AND AY-EMY3D ON END OF VALVE TO ALIGN PILOT HOLES (SIDE 'B' ONLY)

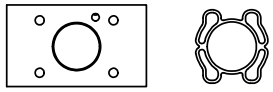

POSITION GASKET ON END OF VALVE BETWEEN BODY OR AY-EMY3D AND SOLENOID OPERATOR BOTH SIDES (SIDE 'A' SHOWN)

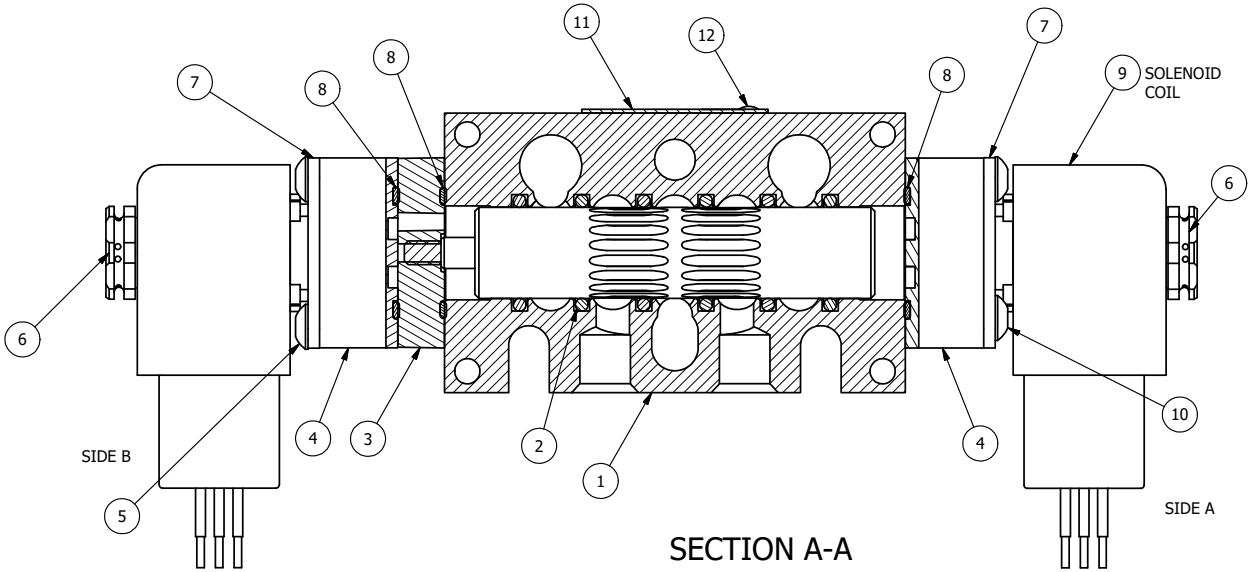


SECTION A-A
SCALE 1 : 1

NOTES:
1) ALWAYS GIVE VALVE MODEL AND PART NUMBER WHEN ORDERING PARTS.
2) FOR DIFFERENT VOLTAGES OTHER THAN 120/60, REPLACE SOLENOID COIL WITH COIL LISTED IN TABLE BELOW.

| FLG | QTY | PART NO | DESCRIPTION |
|---|---|---|---|
| 13 | 3 | V-110 | O-RING, BUNA-N, 70 DURO, AS-114, (REF 5/8 X 13/16 X 3/32), 1/4" SLEEVE, 1/2" SUB, STACK |
| 12 | 2 | V-212 | SCREW, #2 X 3/16 DRIVE, TYPE U, OVAL HEAD, STAINLESS STEEL |
| 11 | 1 | AN-114 | NAMEPLATE, BLANK, FOR VALVES WITH SPRINGS OR DETENTS |
| 10 | 4 | V-584 | SCREW, 10-24 X 1, BUTTON HEAD SOCKET CAP WITH MICROSPHERE APPLIED TO THREADS. |
| 9 | 2 | V-593-1 | COIL - 120VAC EXP PROOF, 1/2" NPTF STAINLESS CONNECTION, NASS #0568 05.1-00/6874 |
| 8 | 3 | EMG3 | GASKET - END MOUNT SOLENOID, BUNA-N, 1/4" & 3/8" VALVES |
| 7 | 2 | SEC3-7 | PLATE, RE-INFORCEMENT, SOLENOID, STAMPED, 304 STAINLESS |
| 6 | 2 | V-562 | NUT, SOLENOID, SIDE EXHAUST |
| 5 | 4 | V-601 | SCREW, 10-24 X 1-1/2, BUTTON HEAD SOCKET CAP WITH MICROSPHERE ADHESIVE |
| 4 | 2 | V-550-1 | SOL OPER, END MOUNT, NON-LOCKING O'RIDE |
| 3 | 1 | AY-EMY3D | ASSY - SPR CTR, REGEN CTR SPL, END MOUNT SOLENOID, 1/4" & 3/8" VALVES |
| 2 | 6 | V-39 | O-RING, VITON, STD BODY, 1/4" & 3/8" VALVES |
| 1 | 1 | B2-10E | FINISHED - SOLID BODY, UPPER PILOTS, 1/4" STACKING VALVE |

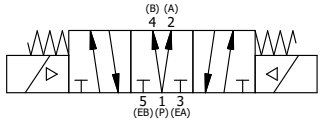


| COIL VOLTAGES | |
|---|---|
| PART NO | REPLACE COIL |
| EBSY2DXC 12 VDC | V-593-2 |
| EBSY2DXC 24VDC | V-593-3 |
| EBSY2DXC 240/60 | V-593-4 |

| NO. | DATE | REVISION |
|---|---|---|
| A | 6/1/2018 | ECG3 GASKET TO EMG3, SPL ASSY TO AY-EMY3D. |

LIMITS ON DIMENSIONS UNLESS OTHERWISE SPECIFIED
2-PL DECIMAL ± .01
3-PL DECIMAL ± .005
FRACTIONAL ± 1/64
ANGULAR ± 1/2'

**AAA PRODUCTS INTERNATIONAL**
7114 Harry Hines Blvd
Dallas, TX 75235

DRAWN: RMcKenna DATE: 4/10/2016
CHECKED: KWaite DATE: 4/10/2016
SCALE: 1 : 1 SHEET: 1 OF 1
RELEASED: HWomack DATE: 4/10/2016

TITLE: 1/4" STACK, DBL SOL, 3 POS, SPR CTR, SOL SHFT, REGEN CTR SPL, EXP PROOF, 120/60, SIDE VENT

PART NO.: EBSY2DXC

REV.: A

THE INFORMATION CONTAINED WITHIN THIS DOCUMENT IS PROPRIETARY TO AAA PRODUCTS AND MAY NOT BE DISCLOSED WITHOUT PRIOR WRITTEN CONSENT

D:\Engineering\Product\Valve\Assembly\Standard\SCV\DWG\EBSY2DXC.dw