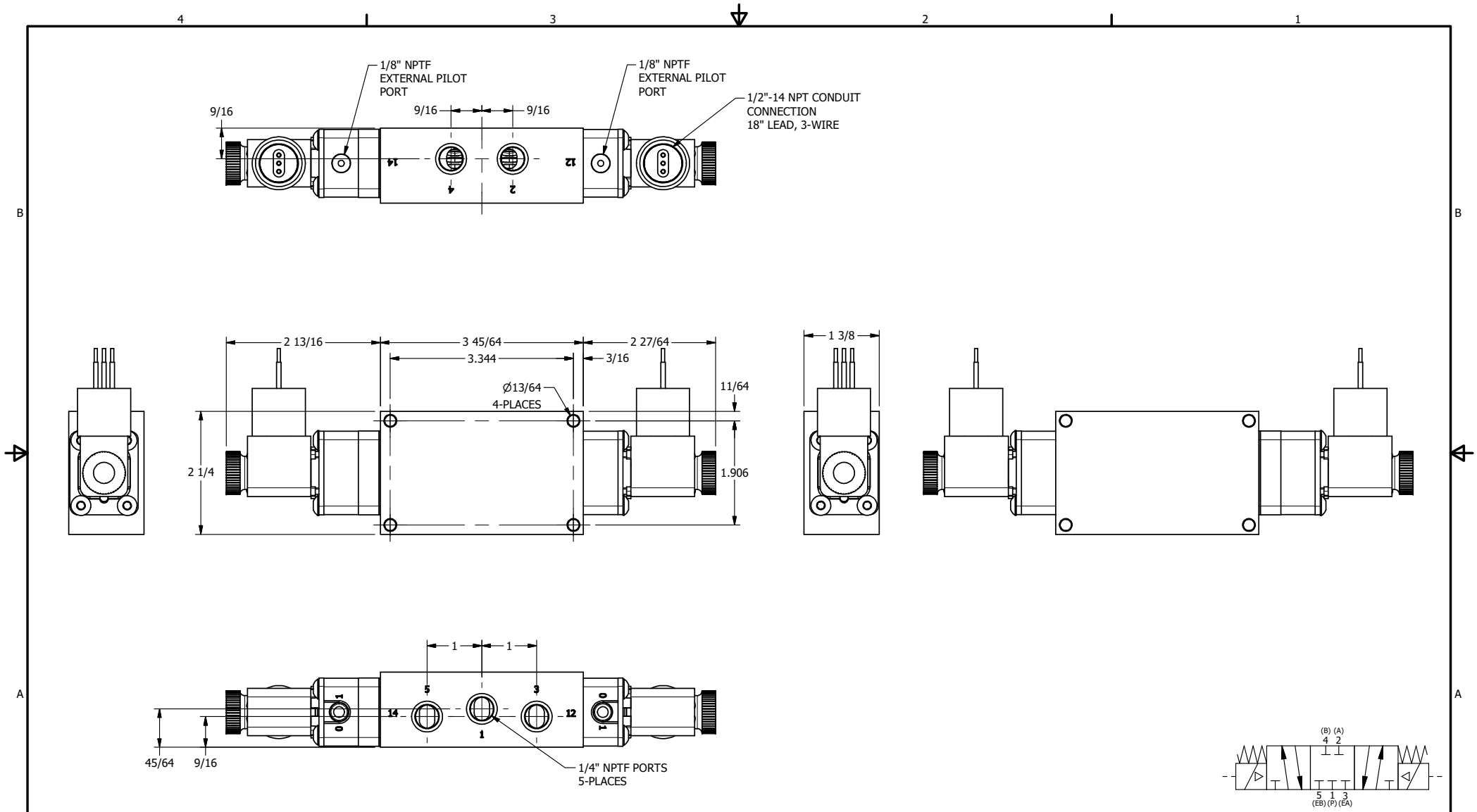

AAA PRODUCTS INTERNATIONAL 7114 Harry Hines Blvd Dallas, TX 75235	TITLE: 1/4" SIDE PORT, DBL SOL, 3 POS, CLSD SPR CTR, MOLD-OVER, BR & SS, DUST EXCLDR, EXT PILOT	DRAWING NO.: DIM_ZESY2JLZ

THE INFORMATION CONTAINED WITHIN THIS DOCUMENT IS PROPRIETARY TO AAA PRODUCTS AND MAY NOT BE DISCLOSED WITHOUT PRIOR WRITTEN CONSENT