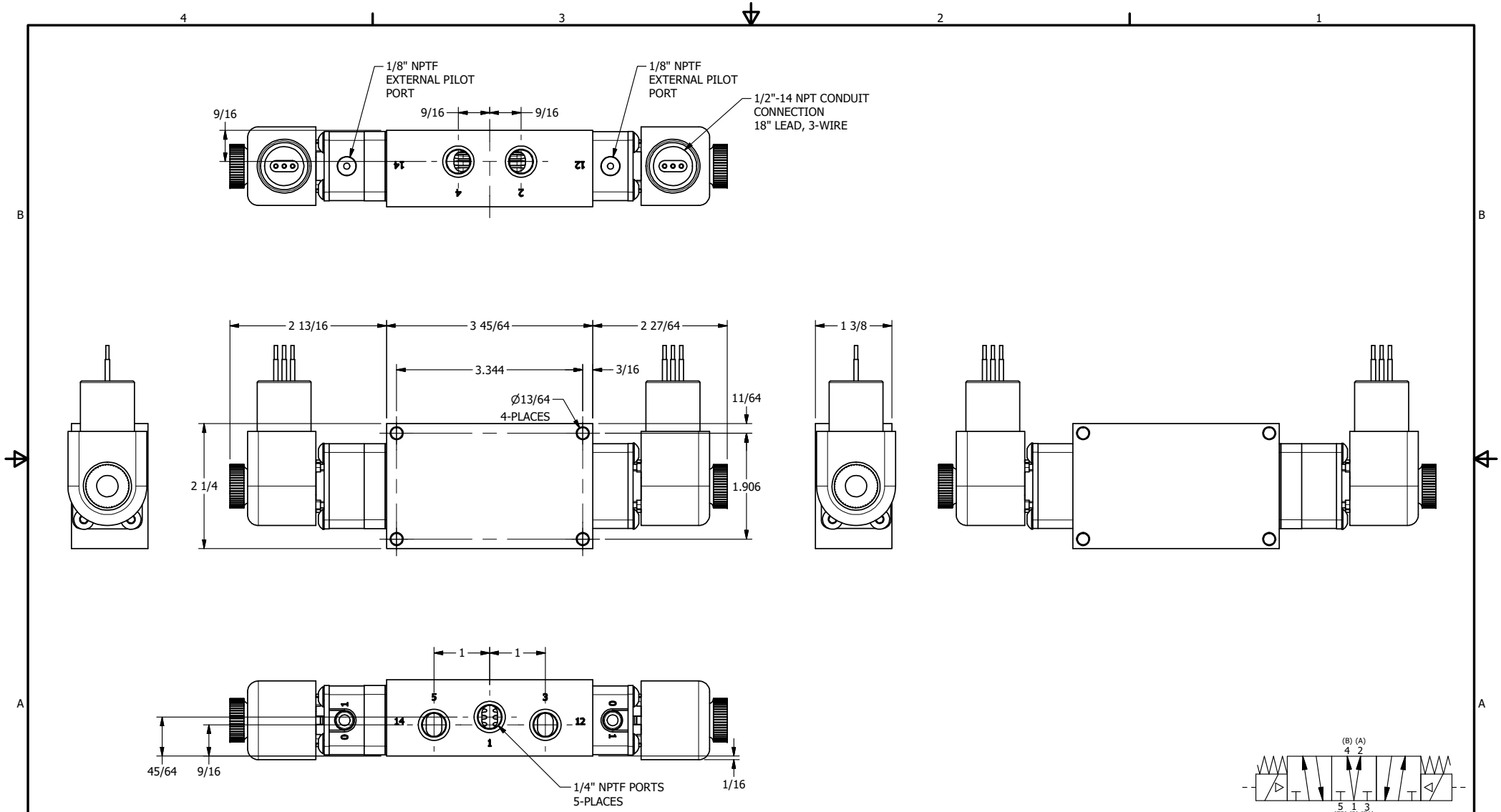


| | | |
|---|---|---|
| **AAA PRODUCTS INTERNATIONAL**<br>7114 Harry Hines Blvd<br>Dallas, TX 75235 | TITLE: 1/4" SIDE PORT, DBL SOL, 3 POS, REGEN SPR CTR, EXPL PROOF, BR & SS, DUST EXCLDR, EXT PILOT | DRAWING NO.: DIM_ZESY2DXLZ |

THE INFORMATION CONTAINED WITHIN THIS DOCUMENT IS PROPRIETARY TO AAA PRODUCTS AND MAY NOT BE DISCLOSED WITHOUT PRIOR WRITTEN CONSENT