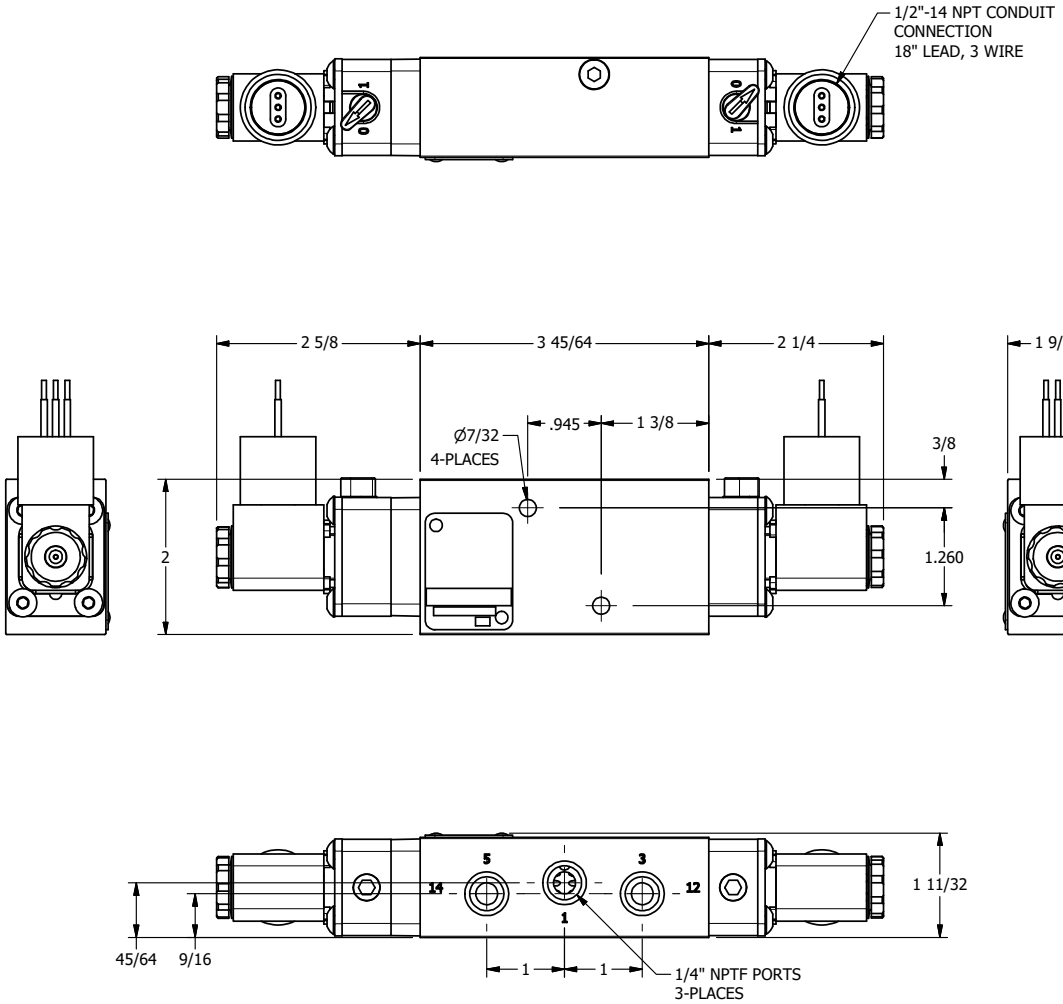

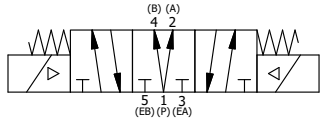

AAA PRODUCTS INTERNATIONAL
7114 Harry Hines Blvd
Dallas, TX 75235

TITLE: 1/4" NAMUR, DBL SOL, 3 POS, SPR CTR, SOL SHFT, REGEN CTR SPL, MOLD-OVER, LCKNG OVRD

DRAWING NO.: DIM_NSY2DJO

THE INFORMATION CONTAINED WITHIN THIS DOCUMENT IS PROPRIETARY TO AAA PRODUCTS AND MAY NOT BE DISCLOSED WITHOUT PRIOR WRITTEN CONSENT