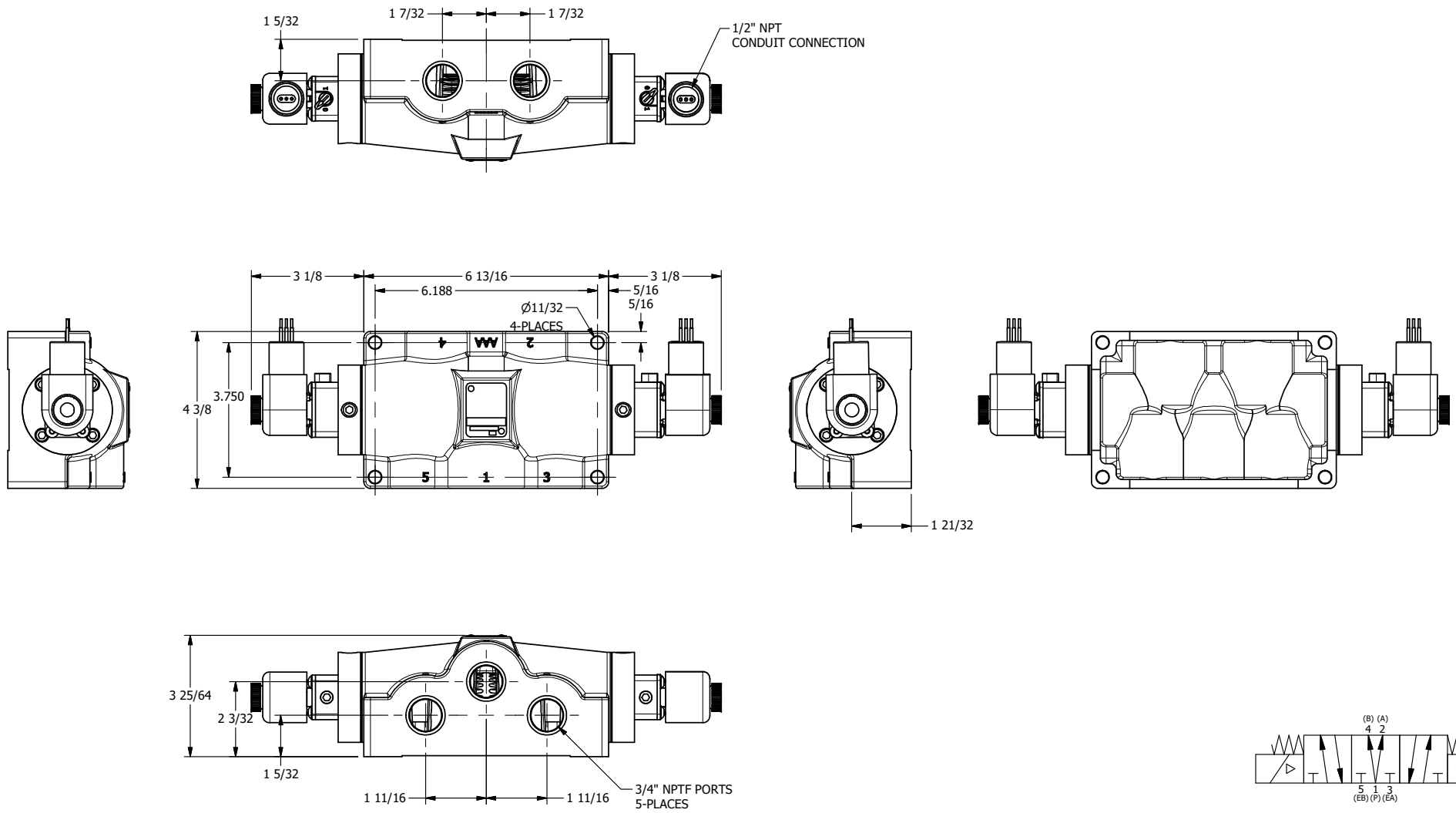

AAA PRODUCTS INTERNATIONAL
7114 Harry Hines Blvd
Dallas, TX 75235

TITLE: 3/4" SIDE PORT, DBL SOL, 3 POS, SPR CTR, REGEN CTR SPL, EXPL PROOF, LCKNG OVRD, DUST EXCDLR

DRAWING NO.: DIM_ESY6DXOL

THE INFORMATION CONTAINED WITHIN THIS DOCUMENT IS PROPRIETARY TO AAA PRODUCTS AND MAY NOT BE DISCLOSED WITHOUT PRIOR WRITTEN CONSENT