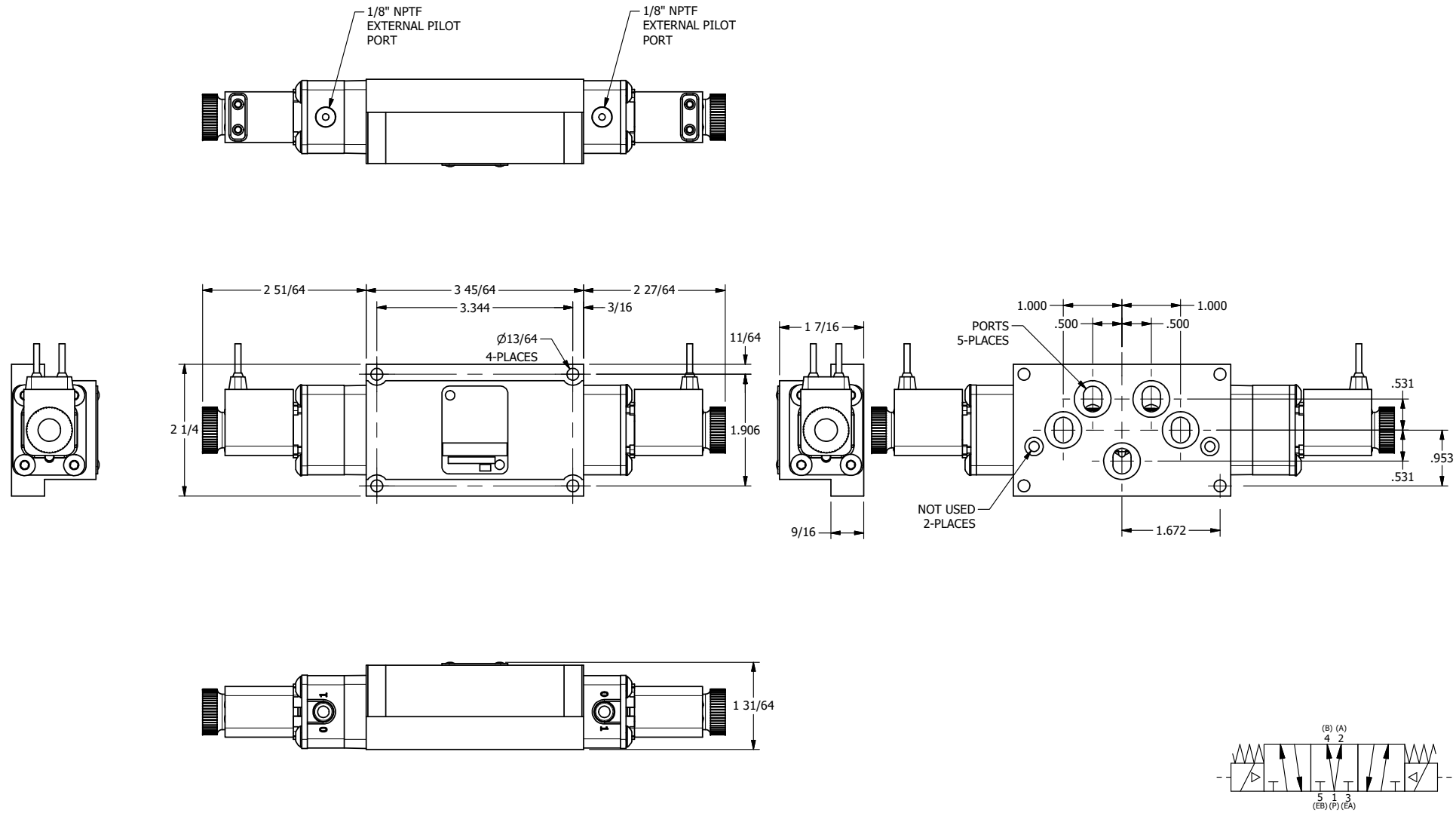

AAA PRODUCTS INTERNATIONAL
7114 Harry Hines Blvd
Dallas, TX 75235

TITLE: 3/8" SUBPLATE, DBL SOL, 3 POS, REGEN SPR CTR, FLYING LEAD, DUST EXCLDR, EXT PILOT

DRAWING NO.: DIM_ESY3PDMLZ

THE INFORMATION CONTAINED WITHIN THIS DOCUMENT IS PROPRIETARY TO AAA PRODUCTS AND MAY NOT BE DISCLOSED WITHOUT PRIOR WRITTEN CONSENT