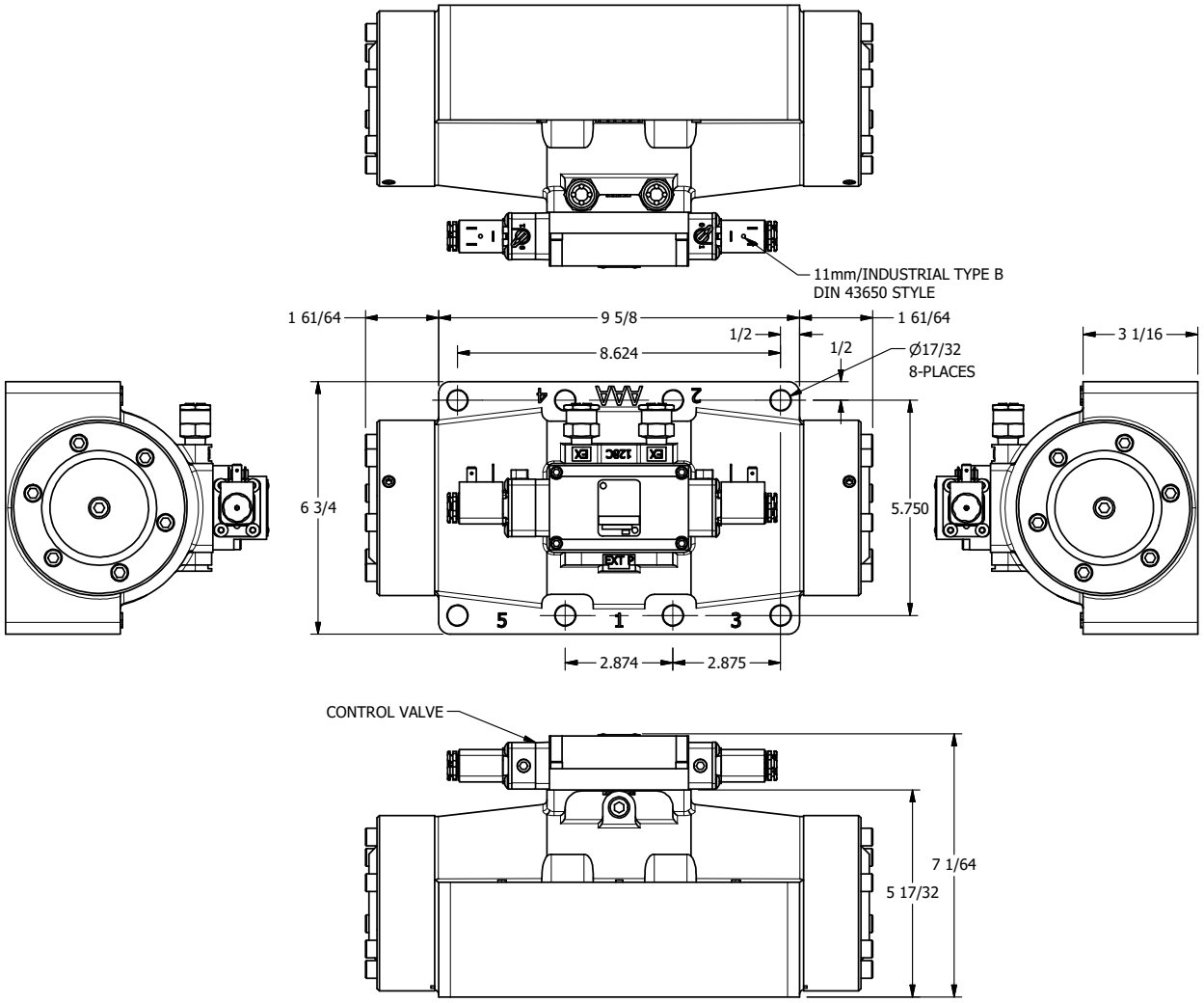

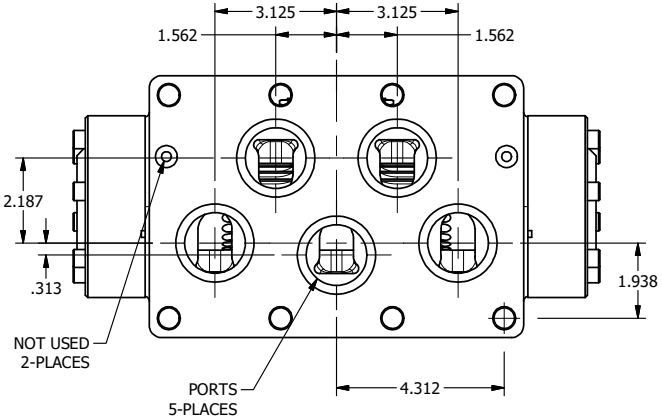

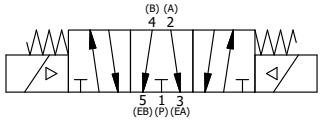

AAA PRODUCTS INTERNATIONAL 7114 Harry Hines Blvd Dallas, TX 75235	TITLE: 2" SUBPLATE, DBL SOL, 3 POS, SPR CTR, SOL SHFT, FLOAT CTR SPL, LCKNG OVRD, SIDE VENT	DRAWING NO.: DIM_ESY16PGOC

THE INFORMATION CONTAINED WITHIN THIS DOCUMENT IS PROPRIETARY TO AAA PRODUCTS AND MAY NOT BE DISCLOSED WITHOUT PRIOR WRITTEN CONSENT