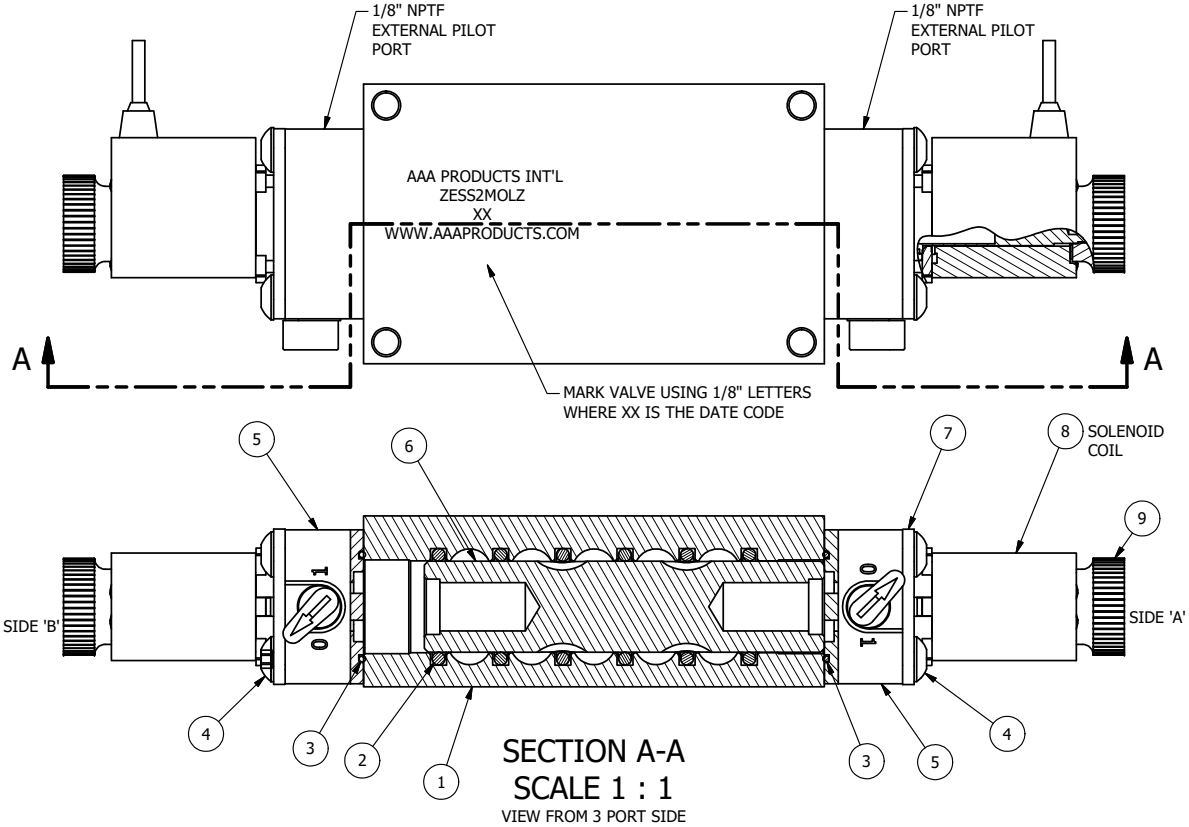

SECTION A-A
SCALE 1 : 1
VIEW FROM 3 PORT SIDE

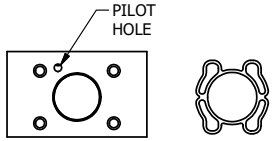

ALIGN PILOT AND SLOT IN ADAPTOR
WITH GASKET IN BETWEEN, BOTH SIDES
(ADAPTOR SHOULD BE INSTALLED AS SHOWN)
SUPPLY 50-150 PSI TO 1/8" NPTF PILOT PORT IN ADAPTOR.

FLG	QTY	PART NO	DESCRIPTION
9	2	V-567W	E SERIES SINTERED BRONZE MUFFLER, DUST EXCLUDER, V-613 LOCK WASHER
8	2	V-569-1	SYSTEM 8 COIL 120 50/60.NASS # 0561 38.1 00/4984.
7	2	SEC3-7	PLATE, RE-INFORCEMENT, SOLENOID, STAMPED, 304 STAINLESS
6	1	S3R	SPOOL - SOLID, STANDARD, 2 POS, CLSD CTR, 1/4" & 3/8" VALVE
5	2	V-599-1	SOL OPER, END MOUNT, LOCKING O'RIDE
4	8	V-584-SS	SCREW, 10-24 X 1, BUTTON HEAD SOCKET CAP, 18-8 OR 303 STAINLESS
3	2	EMG3	GASKET - END MOUNT SOLENOID, BUNA-N, 1/4" & 3/8" VALVES
2	6	V-39	O-RING, VITON, STD BODY, 1/4" & 3/8" VALVES
1	1	ZB2-1	BODY - BRASS, UPPER PILOTS (BUTTON BLEEDER), 1/4" SIDE PORT VALVE

NOTES:
1) ALWAYS GIVE VALVE MODEL AND PART NUMBER WHEN ORDERING PARTS.
2) FOR DIFFERENT VOLTAGES OTHER THAN 120/60, REPLACE SOLENOID COIL WITH COIL LISTED IN TABLE BELOW.

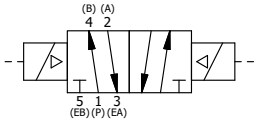

COIL VOLTAGES	
PART NO	REPLACE COIL
ZESS2MOLZ 12VDC	V-569-2
ZESS2MOLZ 24VDC	V-569-3
ZESS2MOLZ 240/60	V-569-4

LIMITS ON DIMENSIONS UNLESS OTHERWISE SPECIFIED
2-PL DECIMAL ± .01
3-PL DECIMAL ± .005
FRACTIONAL ± 1/64
ANGULAR ± 1/2'

AAA PRODUCTS INTERNATIONAL
7114 Harry Hines Blvd
Dallas, TX 75235

DRAWN: RMcKenna	DATE: 9/30/2026	CHECKED: KWaite	DATE: 9/30/2026
SCALE: 1 : 1	SHEET: 1 OF 1	RELEASED: HWomack	DATE: 9/30/2026

TITLE: 1/4" SIDE PORT, DBL SOL, 2 POS, SOL RTRN, BR & SS, FLYING LEAD, L-OVRD, EXCLDR, EXT PILOT, BR & SS

PART NO.: ZESS2MOLZ

REV.:

THE INFORMATION CONTAINED WITHIN THIS DOCUMENT IS PROPRIETARY TO AAA PRODUCTS AND MAY NOT BE DISCLOSED WITHOUT PRIOR WRITTEN CONSENT

D:\Engineering\Product\Valves\Assembly\standard\ESS\DWG\ZESS2MOLZ.dw