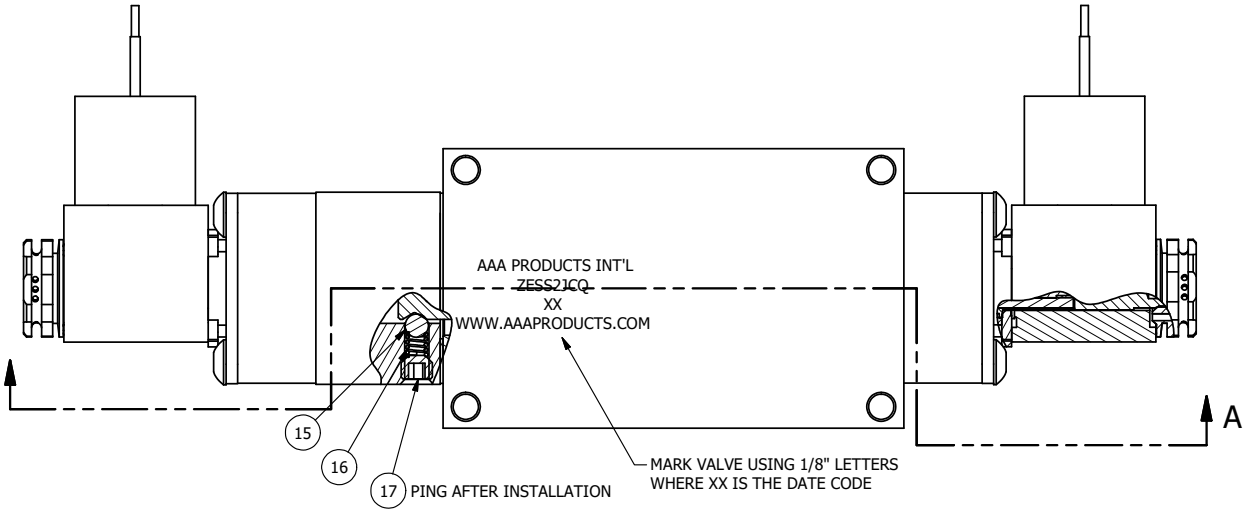

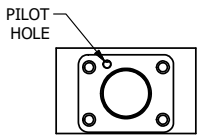

POSITION GASKET AND PEC3-18-Z
ON END OF VALVE TO ALIGN
PILOT HOLES (SIDE 'B' ONLY)

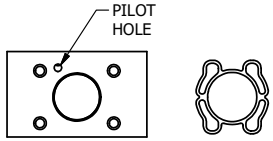

ALIGN PILOT AND SLOT IN ADAPTOR
WITH GASKET IN BETWEEN, BOTH SIDES
FOR EXTERNAL PILOT OPERATION - ROTATE ADAPTOR
180 DEGREES. REMOVE 1/8" NPTF PLUG AND
SUPPLY 50-150 PSI TO 1/8" NPTF PILOT PORT IN ADAPTOR.

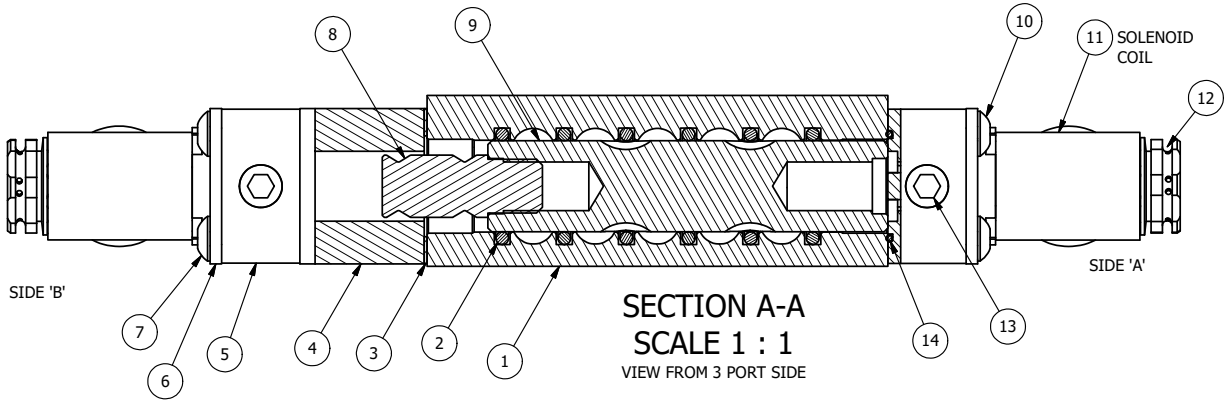

SECTION A-A
SCALE 1 : 1
VIEW FROM 3 PORT SIDE

FLG	QTY	PART NO	DESCRIPTION
17	1	V-21-SS	SCREW, 1/4-20 X 3/16, SOCKET SET, CUP POINT, 18-8 SS
16	1	DS3-1	SPRING, DETENT, STAINLESS, 1/4" & 3/8" VALVE. LEE SPRING # LC 029B 0 S.
15	1	V-14	BALL, CHROME STEEL 3/16 DIA, GRADE 25, FOR DETENT
14	2	EMG3	GASKET - END MOUNT SOLENOID, BUNA-N, 1/4" & 3/8" VALVES
13	2	V-19-SS	PLUG, SOCKET PIPE 1/8"-27 NPT, 7/8 TAPER, PLAIN, FLUSH SEAL, STAINLESS STEEL
12	2	V-562	NUT, SOLENOID, SIDE EXHAUST
11	2	V-600-1	COIL - 1/2 NPTF HUB 120V 50/60HZ, NASS P/N 0561 44.1-00/4984
10	4	V-584-SS	SCREW, 10-24 X 1, BUTTON HEAD SOCKET CAP, 18-8 OR 303 SS
9	1	S3R	SPOOL - SOLID, STANDARD, 2 POS, CLSD CTR, 1/4" & 3/8" VALVE
8	1	PBS3-13-SS	STUD - POS. A & C. DETENT, STAINLESS STEEL, 1/4" & 3/8" VALVE
7	4	V-585-SS	SCREW, 10-24 X 2-1/8, SOCKET BUTTON HEAD, 18-8 STAINLESS
6	2	SEC3-7	PLATE, RE-INFORCEMENT, SOLENOID, STAMPED, 304 STAINLESS
5	2	V-550-1	SOL OPER, END MOUNT, NON-LOCKING O'RIDE
4	1	PEC3-18-Z	END CAP, SPACER, DETENT, SOLENOID, 360 BRASS, 1/4" & 3/8" VALVES
3	1	BG3	GASKET - END CAP, 1/4" & 3/8" VALVE
2	6	V-39	O-RING, VITON, STD BODY, 1/4" & 3/8" VALVES
1	1	ZB2-1	BODY - BRASS, UPPER PILOTS (BUTTON BLEEDER), 1/4" SIDE PORT VALVE

NOTES:
1) ALWAYS GIVE VALVE MODEL AND PART NUMBER WHEN ORDERING PARTS.
2) FOR DIFFERENT VOLTAGES OTHER THAN 120/60, REPLACE SOLENOID COIL WITH COIL LISTED IN TABLE BELOW.
3) LUBRICATE DETENT BALL, SPRING AND STUD.

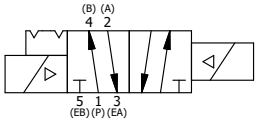

COIL VOLTAGES	
PART NO	REPLACE COIL
ZESS2JCQ 12VDC	V-600-2
ZESS2JCQ 24VDC	V-600-3
ZESS2JCQ 240/60	V-600-4

LIMITS ON DIMENSIONS UNLESS OTHERWISE SPECIFIED
2-PL DECIMAL ± .01
3-PL DECIMAL ± .005
FRACTIONAL ± 1/64
ANGULAR ± 1/2'

AAA PRODUCTS INTERNATIONAL
7114 Harry Hines Blvd
Dallas, TX 75235

DRAWN: RMcKenna	DATE: 6/21/2022	CHECKED: KWaite	DATE: 6/21/2022
SCALE: 1 : 1	SHEET: 1 OF 1	RELEASED: HWomack	DATE: 6/21/2022

TITLE:
1/4" SIDE PORT, DBL SOL, 2 POS, DETENT, MOLD-OVER, 120/60, BR & SS, SIDE VENT

PART NO.: ZESS2JCQ

REV.:

THE INFORMATION CONTAINED WITHIN THIS DOCUMENT IS PROPRIETARY TO AAA PRODUCTS AND MAY NOT BE DISCLOSED WITHOUT PRIOR WRITTEN CONSENT

D:\Engineering\Product\Valves\Assembly\Standard\ESS1\DWG\ZESS2JCQ.dw