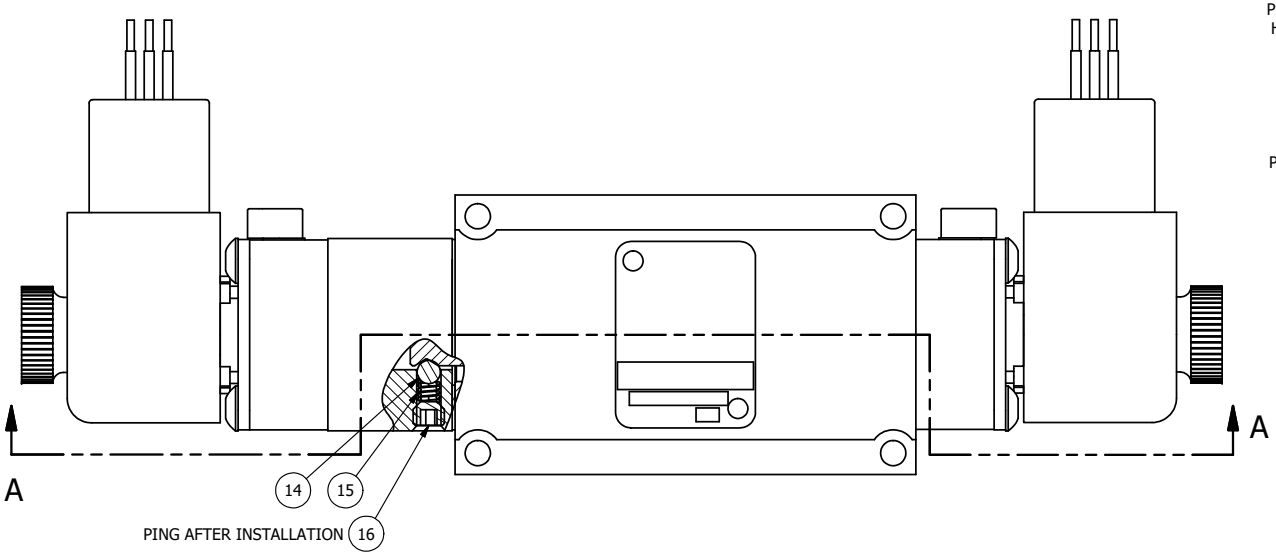

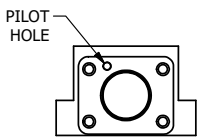

POSITION GASKET AND PEC3-18
ON END OF VALVE TO ALIGN
PILOT HOLES (SIDE 'B' ONLY)

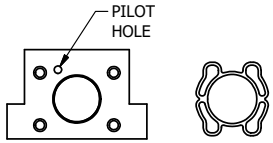

ALIGN PILOT AND SLOT IN ADAPTOR
WITH GASKET IN BETWEEN, BOTH SIDES
FOR EXTERNAL PILOT OPERATION - ROTATE ADAPTOR
180 DEGREES. REMOVE 1/8" NPTF PLUG AND
SUPPLY 50-150 PSI TO 1/8" NPTF PILOT PORT IN ADAPTOR.

NOTES:
1) ALWAYS GIVE VALVE MODEL AND PART NUMBER WHEN ORDERING PARTS.
2) LUBRICATE DETENT BALL, SPRING AND STUD.
3) FOR DIFFERENT VOLTAGES OTHER THAN 120/60, REPLACE SOLENOID COIL
WITH COIL LISTED IN TABLE BELOW.

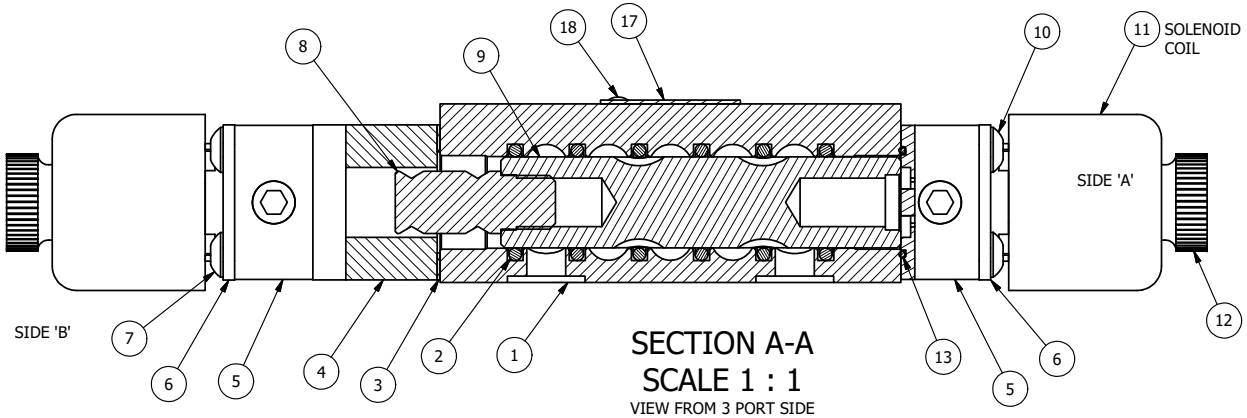

SECTION A-A
SCALE 1 : 1
VIEW FROM 3 PORT SIDE

FLG	QTY	PART NO	DESCRIPTION
19	1	SPK-3	KIT - SUBPLATE MOUNTING, 3/8" SUBPLATE VALVES
18	2	V-212	SCREW, #2 X 3/16 DRIVE, TYPE U, OVAL HEAD, STAINLESS STEEL
17	1	AN-114	NAMEPLATE, BLANK, FOR VALVES WITH SPRINGS OR DETENTS
16	1	V-21	SCREW, 1/4-20 X 3/16, SOCKET SET, CUP POINT
15	1	DS3	SPRING - DETENT, 1/4" & 3/8" VALVE
14	1	V-14	BALL, CHROME STEEL 3/16 DIA, GRADE 25, FOR DETENT
13	2	EMG3	GASKET - END MOUNT SOLENOID, BUNA-N, 1/4" & 3/8" VALVES
12	2	V-567W	E SERIES SINTERED BRONZE MUFFLER, DUST EXCLUDER, V-613 LOCK WASHER
11	2	V-593-1	COIL - 120VAC EXP PROOF, 1/2" NPTF STAINLESS CONNECTION, NASS #0568 05.1-00/6874
10	4	V-584	SCREW, 10-24 X 1, BUTTON HEAD SOCKET CAP WITH MICROSPHERE APPLIED TO THREADS.
9	1	S3R	SPOOL - SOLID, STANDARD, 2 POS, CLSD CTR, 1/4" & 3/8" VALVE
8	1	PBS3-13-SS	STUD - POS. A & C. DETENT, STAINLESS STEEL, 1/4" & 3/8" VALVE
7	4	V-585	SCREW, 10-24 X 2-1/8, SOCKET BUTTON HEAD
6	2	SEC3-7	PLATE, RE-INFORCEMENT, SOLENOID, STAMPED, 304 STAINLESS
5	2	V-599-1	SOL OPER, END MOUNT, LOCKING O'RIDE
4	1	PEC3-18	ENDCAP, SPACER, DETENT, SOLENOID, 6061-T6, 1/4" & 3/8" VALVES
3	1	BG3	GASKET - END CAP, 1/4" & 3/8" VALVE
2	6	V-39	O-RING, VITON, STD BODY, 1/4" & 3/8" VALVES
1	1	BP3-1E	BODY - SOLID, BUTTON BLEEDER, ANODIZED, 3/8" SUBPLATE VALVE

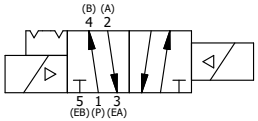

COIL VOLTAGES	
PART NO	REPLACE COIL
ESS3PXOLQ 12VDC	V-593-2
ESS3PXOLQ 24VDC	V-593-3
ESS3PXOLQ 240/60	V-593-4

LIMITS ON DIMENSIONS UNLESS OTHERWISE SPECIFIED
2-PL DECIMAL ± .01
3-PL DECIMAL ± .005
FRACTIONAL ± 1/64
ANGULAR ± 1/2'

AAA PRODUCTS INTERNATIONAL
7114 Harry Hines Blvd
Dallas, TX 75235

DRAWN: RMcKenna	DATE: 6/22/2022	CHECKED: KWaite	DATE: 6/22/2022
SCALE: 1 : 1	SHEET: 1 OF 1	RELEASED: HWomack	DATE: 6/22/2022

TITLE: 3/8" SUBPLATE, DBL SOL, 2 POS, DETENT, EXPL PROOF, 120/60, DUST EXCLDR

PART NO.: ESS3PXOLQ

REV.:

THE INFORMATION CONTAINED WITHIN THIS DOCUMENT IS PROPRIETARY TO AAA PRODUCTS AND MAY NOT BE DISCLOSED WITHOUT PRIOR WRITTEN CONSENT

D:\Engineering\Product\Valves\Assembly\standard\ESS3\DWG\ESS3PXOLQ.dwg