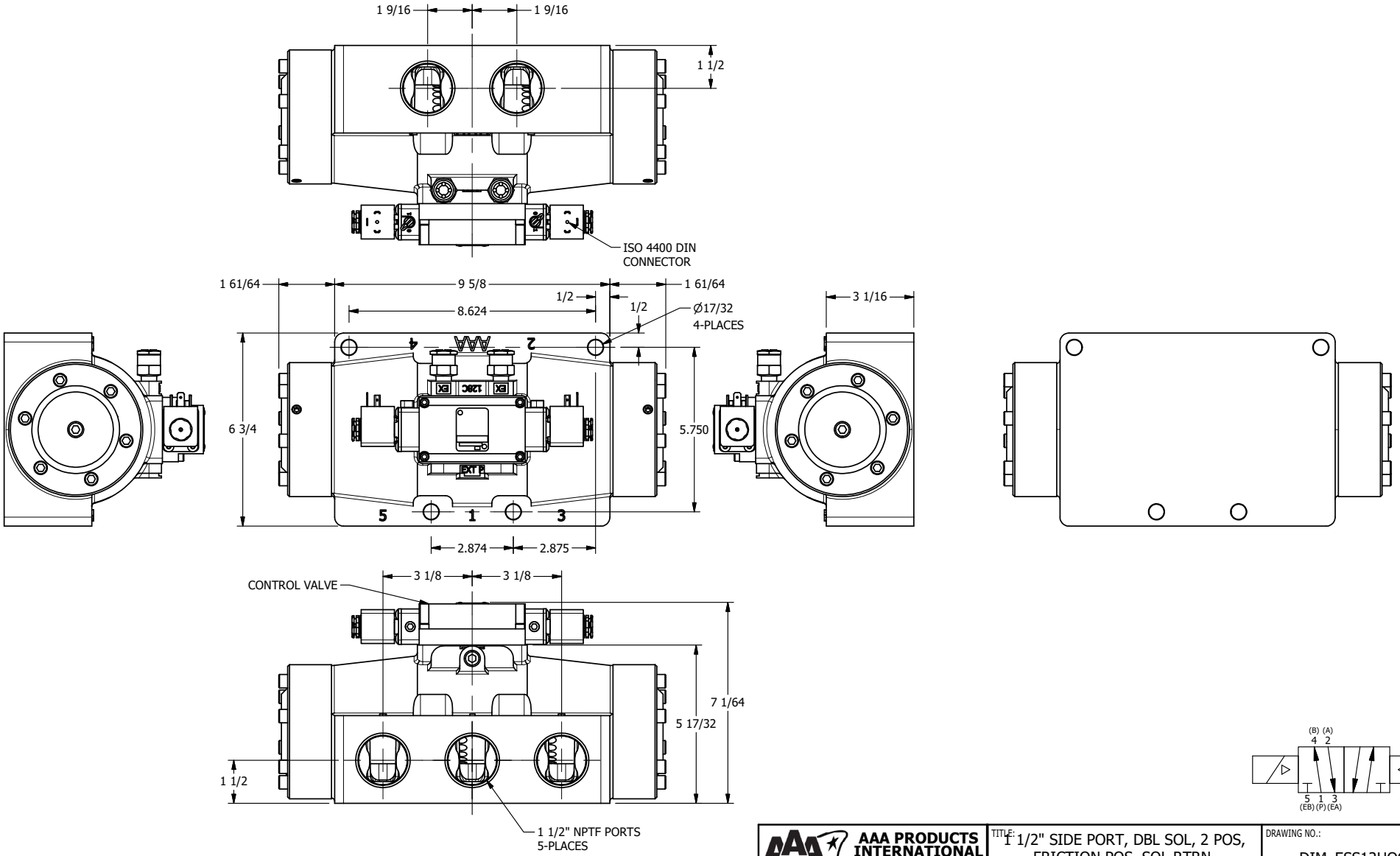

AAA PRODUCTS INTERNATIONAL
7114 Harry Hines Blvd
Dallas, TX 75235

TITLE: 1 1/2" SIDE PORT, DBL SOL, 2 POS, FRICTION POS, SOL RTRN, H-TMP COIL, LCKNG OVRD, SIDE VENT

DRAWING NO.: DIM_ESS12HOC

THE INFORMATION CONTAINED WITHIN THIS DOCUMENT IS PROPRIETARY TO AAA PRODUCTS AND MAY NOT BE DISCLOSED WITHOUT PRIOR WRITTEN CONSENT