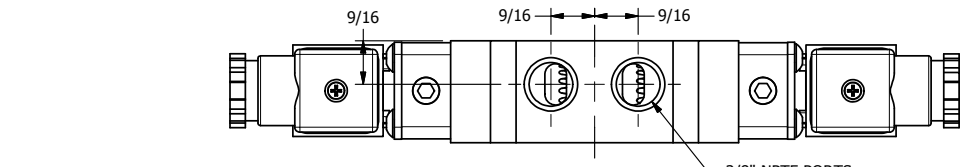

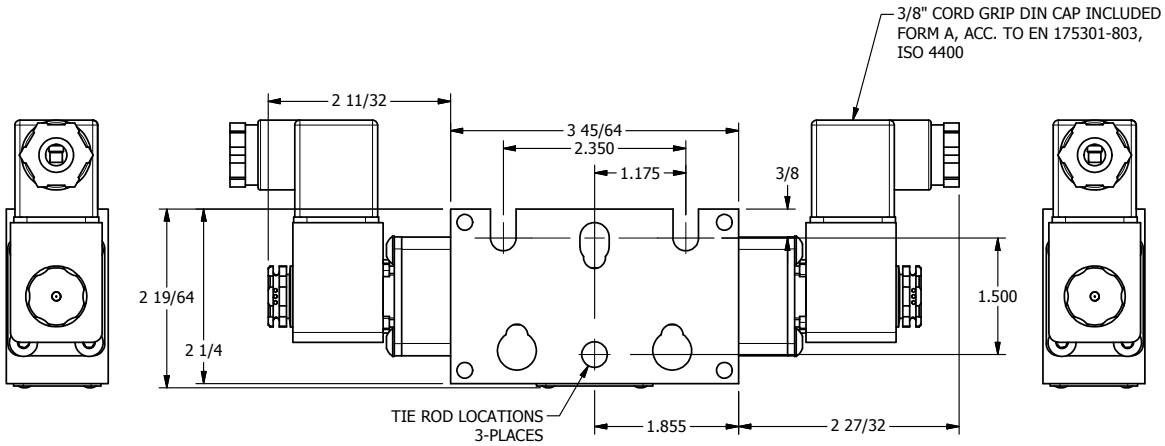

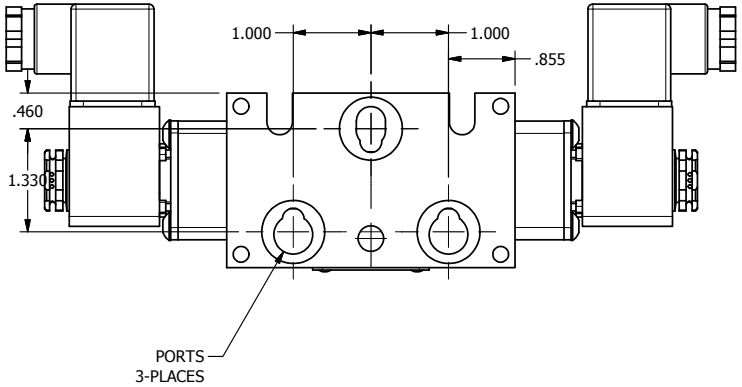

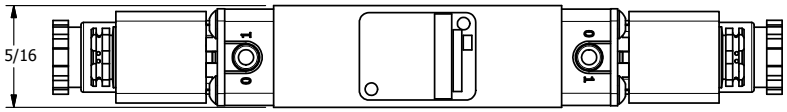

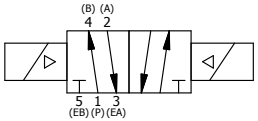

AAA PRODUCTS INTERNATIONAL 7114 Harry Hines Blvd Dallas, TX 75235	TITLE: 3/8" STACK, DBL SOL, 2 POS, FRICTION POS, SOL RTRN, INTR SAFE, 24VDC, SIDE VENT	DRAWING NO.: DIM_EBSS3AC

THE INFORMATION CONTAINED WITHIN THIS DOCUMENT IS PROPRIETARY TO AAA PRODUCTS AND MAY NOT BE DISCLOSED WITHOUT PRIOR WRITTEN CONSENT