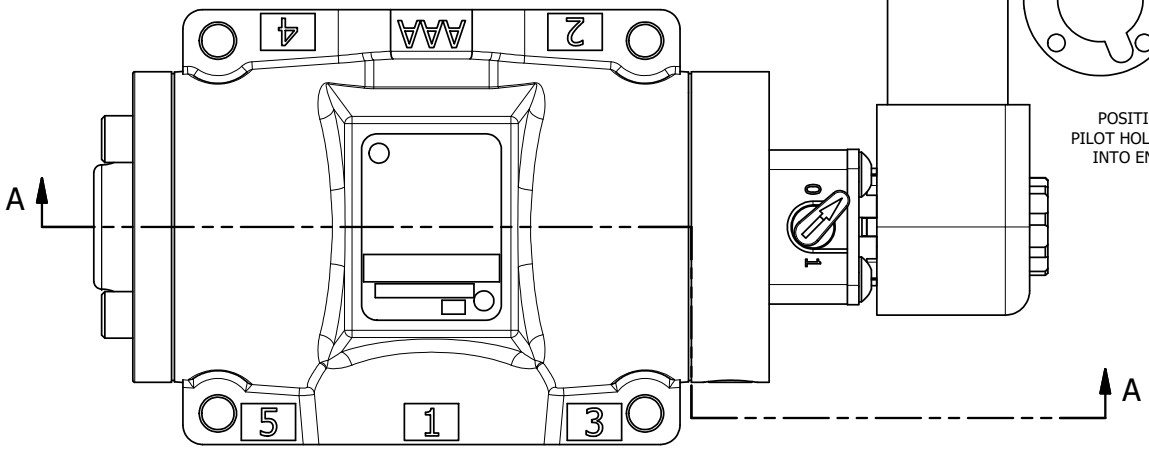


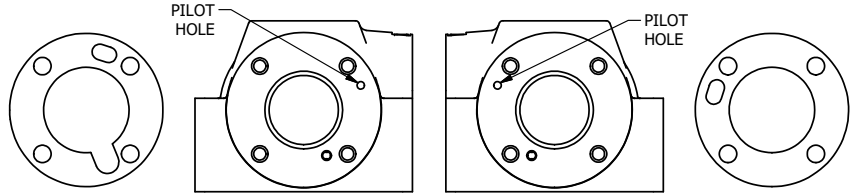


POSITION GASKET TO SEAL UPPER PILOT HOLE, AND OPENING LOWER PILOT INTO END OF VALVE. SIDE 'B' ONLY.

ALIGN PILOT AND HOLE IN GASKET, SIDE A ONLY FOR EXTERNAL PILOT OPERATION - ROTATE THE ROUND ALUMINUM ADAPTOR 180 DEGREES. REMOVE 1/8" NPTF PLUG AND SUPPLY 50-150 PSI TO 1/8" NPTF PILOT PORT IN ADAPTOR.

NOTES:
1) ALWAYS GIVE VALVE MODEL AND PART NUMBER WHEN ORDERING PARTS.
2) FOR DIFFERENT VOLTAGES OTHER THAN 120/60, REPLACE SOLENOID COIL WITH COIL LISTED IN TABLE BELOW.

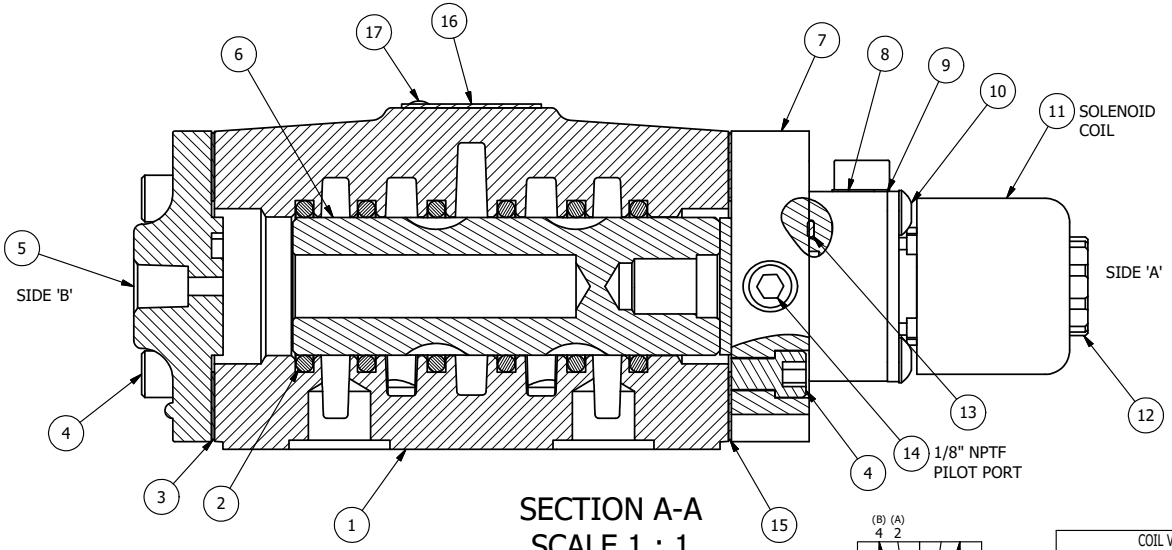


SECTION A-A
SCALE 1 : 1
VIEW FROM 3 PORT SIDE

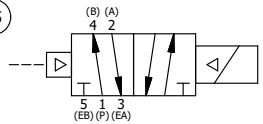


| FLG | QTY | PART NO | DESCRIPTION |
|---|---|---|---|
| 17 | 2 | V-212 | SCREW, #2 X 3/16 DRIVE, TYPE U, OVAL HEAD, STAINLESS STEEL |
| 17 | 1 | SPK-4 | KIT - SUBPLATE MOUNT, 1/2" SUBPLATE VALVES |
| 16 | 1 | AN-115 | NAMEPLATE, BLANK, FOR HE,KE,KD,RR,D,CR,PP,SR,SS VALVES |
| 15 | 1 | ECG48 | GASKET - END CAP, 1/2", 3/4" & 1" VALVE |
| 14 | 1 | V-19 | PLUG, SOCKET PIPE 1/8" NPT (#601-3 PITTSBURG PLUG PART #.) |
| 13 | 1 | EMG3 | GASKET - END MOUNT SOLENOID, BUNA-N, 1/4" & 3/8" VALVES |
| 12 | 1 | V-556 | NUT, SOLENOID, TOP EXHAUST, KNURLED |
| 11 | 1 | V-593-1 | COIL - 120VAC EXP PROOF, 1/2" NPTF STAINLESS CONNECTION, NASS #0568 05.1-00/6874 |
| 10 | 4 | V-584 | SCREW, 10-24 X 1, BUTTON HEAD SOCKET CAP WITH MICROSPHERE APPLIED TO THREADS. |
| 9 | 1 | SEC3-7 | PLATE, RE-INFORCEMENT, SOLENOID, STAMPED, 304 STAINLESS |
| 8 | 1 | V-599-1 | SOL OPER, END MOUNT, LOCKING O'RIDE |
| 7 | 1 | SSA48-1E | ADAPTOR, END MNT SOLENOID, 1/2", 3/4" & 1" VALVE |
| 6 | 1 | S4 | SPOOL - STANDARD, 2 POS, CLSD CTR, 1/2" VALVE |
| 5 | 1 | PEC48 | END CAP, PILOT, 380 AL, 1/2", 3/4" & 1" VALVES |
| 4 | 8 | V-46 | SCREW, 1/4-20 X 3/4, SOCKET HEAD CAP |
| 3 | 1 | ECG48-1 | GASKET - END CAP, LOWER PILOT, 1/2", 3/4" & 1" VALVE |
| 2 | 6 | V-6 | O-RING, BUNA-N, 70 DURO, AS-216, (REF 1-1/8 X 1-3/8 X 1/8), 1/2" VALVES, 1" SUBPLATE |
| 1 | 1 | BP4-4 | BODY, 1/2" SUBPLATE, LOWER & UPPER PILOT |

| COIL VOLTAGES | |
|---|---|
| PART NO | REPLACE COIL |
| ESR4PXO 240/60 | V-593-4 |
| ESR4PXO 24VDC | V-593-3 |
| ESR4PXO 12VDC | V-593-2 |

LIMITS ON DIMENSIONS UNLESS OTHERWISE SPECIFIED
2-PL DECIMAL ± .01
3-PL DECIMAL ± .005
FRACTIONAL ± 1/64
ANGULAR ± 1/2'


AAA PRODUCTS INTERNATIONAL
7114 Harry Hines Blvd
Dallas, TX 75235


DRAWN: RMcKenna DATE: 1/19/2016
CHECKED: KWaite DATE: 1/19/2016
SCALE: 1 : 1 SHEET: 1 OF 1
RELEASED: HWomack DATE: 1/19/2016

TITLE:
1/2" SUBPLATE, SNGL SOL, 2 POS., FRICTION POS, PILOT RTRN, EXPL PROOF, 120/60, LCKNG OVRD

PART NO.: ESR4PXO
REV.:


THE INFORMATION CONTAINED WITHIN THIS DOCUMENT IS PROPRIETARY TO AAA PRODUCTS AND MAY NOT BE DISCLOSED WITHOUT PRIOR WRITTEN CONSENT


D:\Engineering\Product\Valve\Assembly\Standard\Esp\DWG\ESR4PXO.dwg