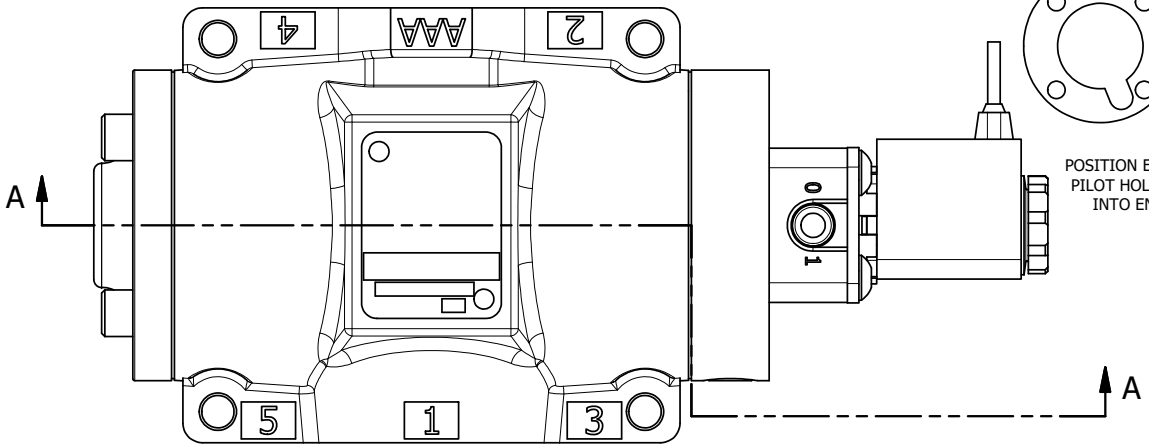

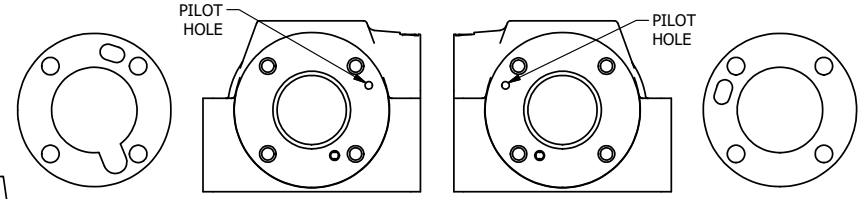

POSITION ECG48-1 GASKET TO SEAL UPPER PILOT HOLE, AND OPENING LOWER PILOT INTO END OF VALVE. SIDE 'B' ONLY.

ALIGN PILOT AND HOLE IN ECG48 GASKET, SIDE A ONLY FOR EXTERNAL PILOT OPERATION - ROTATE THE ROUND ALUMINUM ADAPTOR 180 DEGREES. REMOVE 1/8" NPTF PLUG AND SUPPLY 50-150 PSI TO 1/8" NPTF PILOT PORT IN ADAPTOR.

NOTES:
1) ALWAYS GIVE VALVE MODEL AND PART NUMBER WHEN ORDERING PARTS.
2) FOR DIFFERENT VOLTAGES OTHER THAN 120/60, REPLACE SOLENOID COIL WITH COIL LISTED IN TABLE BELOW.

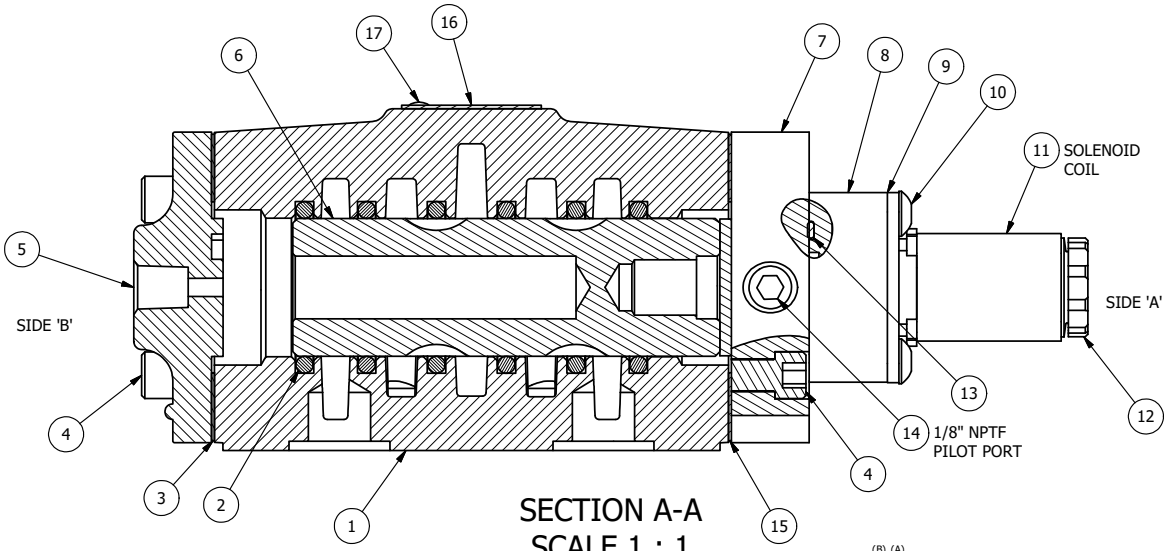

SECTION A-A
SCALE 1 : 1
VIEW FROM 3 PORT SIDE

FLG	QTY	PART NO	DESCRIPTION
18	1	SPK-4	KIT - SUBPLATE MOUNT, 1/2" SUBPLATE VALVES
17	2	V-212	SCREW, #2 X 3/16 DRIVE, TYPE U, OVAL HEAD, STAINLESS STEEL
16	1	AN-115	NAMEPLATE, BLANK, FOR HE,KE,KD,RR,D,CR,PP,SR,SS VALVES
15	1	ECG48	GASKET - END CAP, 1/2", 3/4" & 1" VALVE
14	1	V-19	PLUG, SOCKET PIPE 1/8" NPT (#601-3 PITTSBURG PLUG PART #.)
13	1	EMG3	GASKET - END MOUNT SOLENOID, BUNA-N, 1/4" & 3/8" VALVES
12	1	V-556	NUT, SOLENOID, TOP EXHAUST, KNURLED
11	1	V-569-1	SYSTEM 8 COIL 120 50/60.NASS # 0561 38.1 00/4984.
10	4	V-584	SCREW, 10-24 X 1, BUTTON HEAD SOCKET CAP WITH MICROSPHERE APPLIED TO THREADS.
9	1	SEC3-7	PLATE, RE-INFORCEMENT, SOLENOID, STAMPED, 304 STAINLESS
8	1	V-550-1	SOL OPER, END MOUNT, NON-LOCKING O'RIDE
7	1	SSA48-1E	ADAPTOR, END MNT SOLENOID, 1/2", 3/4" & 1" VALVE
6	1	S4	SPOOL - STANDARD, 2 POS, CLSD CTR, 1/2" VALVE
5	1	PEC48	END CAP, PILOT, 380 AL, 1/2", 3/4" & 1" VALVES
4	8	V-46	SCREW, 1/4-20 X 3/4, SOCKET HEAD CAP
3	1	ECG48-1	GASKET - END CAP, LOWER PILOT, 1/2", 3/4" & 1" VALVE
2	6	V-6	O-RING, BUNA-N, 70 DURO, AS-216, (REF 1-1/8 X 1-3/8 X 1/8), 1/2" VALVES, 1" SUBPLATE
1	1	BP4-4	BODY, 1/2" SUBPLATE, LOWER & UPPER PILOT

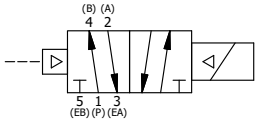

COIL VOLTAGES	
PART NO	REPLACE COIL
ESR4PM 240/60	V-569-4
ESR4PM 24VDC	V-569-3
ESR4PM 12VDC	V-569-2

LIMITS ON DIMENSIONS UNLESS OTHERWISE SPECIFIED
2-PL DECIMAL ± .01
3-PL DECIMAL ± .005
FRACTIONAL ± 1/64
ANGULAR ± 1/2'

AAA PRODUCTS INTERNATIONAL
7114 Harry Hines Blvd
Dallas, TX 75235

DRAWN: RMcKenna	DATE: 4/23/2015	CHECKED: KWaite	DATE: 6/1/2015
SCALE: 1 : 1	SHEET: 1 OF 1	RELEASED: HWomack	DATE: 6/1/2015

TITLE: 1/2" SUBPLATE, SNGL SOL, 2 POS., FRICTION POS, PILOT RTRN, FLYING LEAD, 120/60

PART NO.: ESR4PM

REV.:

THE INFORMATION CONTAINED WITHIN THIS DOCUMENT IS PROPRIETARY TO AAA PRODUCTS AND MAY NOT BE DISCLOSED WITHOUT PRIOR WRITTEN CONSENT

D:\Engineering\Product\Valve\Assembly\Standard\SPK\DWG\ESR4PM.dw