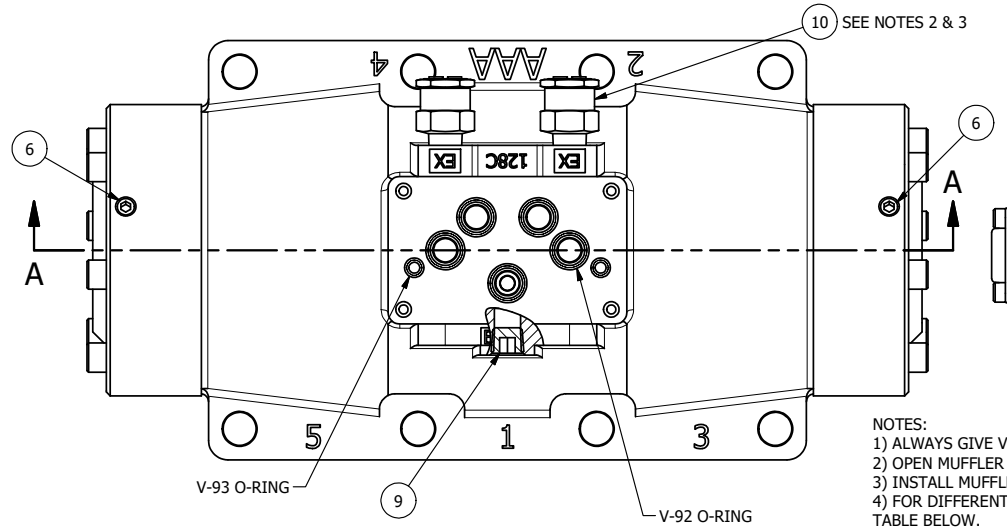

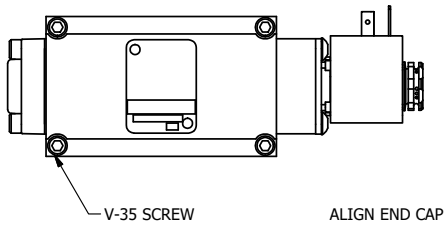

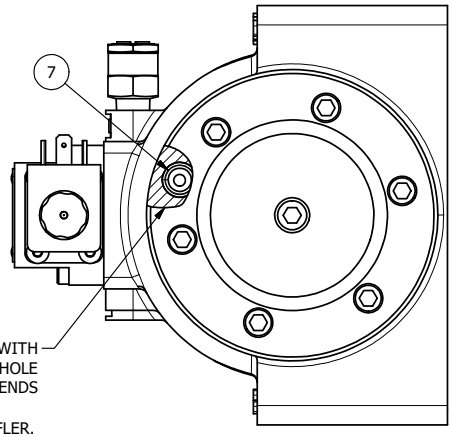

NOTES:
1) ALWAYS GIVE VALVE MODEL AND PART NUMBER WHEN ORDERING.
2) OPEN MUFFLER 2 TURNS FROM CLOSED POSITION. TIGHTEN LOCK NUT ON MUFFLER.
3) INSTALL MUFFLER WITH MAGNALUBE-G GREASE 1 TO 1-1/2 TURNS FROM HAND TIGHT INTO BODY.
4) FOR DIFFERENT VOLTAGES OTHER THAN 120/60, REPLACE TOP CONTROL VALVE WITH VALVE LISTED IN TABLE BELOW.

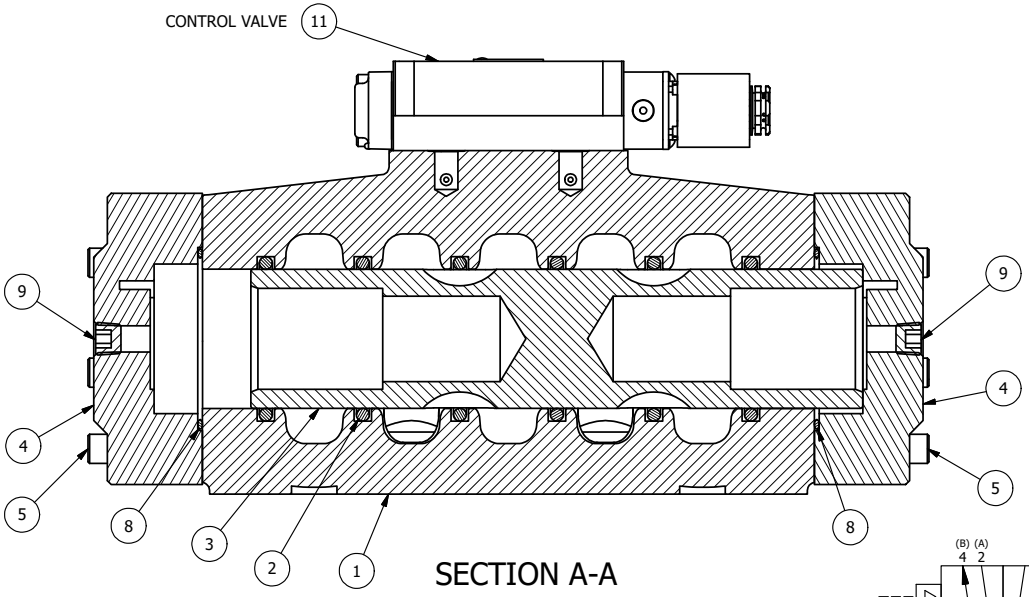

SECTION A-A
SCALE 1/2
VIEW FROM 3 PORT SIDE

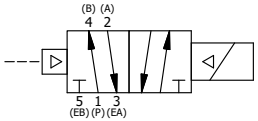

CONTROL VALVE VOLTAGES	
PART NO	REPLACE WITH
ESR16PHC 12VDC	ESR3PHC 12VDC

THE FOLLOWING PARTS ARE INCLUDED WITH THE SUBPLATE VALVE AND ARE USED TO ASSEMBLE.

QTY	PART NO	DESCRIPTION
5	V-92	O-RING, BUNA-N, 70 DURO, AS-014, (REF 1/2 X 5/8 X 1/16), 3/8" SUBPLATE
4	V-35	SCREW, 10-24 X 7/8, SOCKET HEAD CAP
2	V-93	O-RING, BUNA-N, 70 DURO, AS-008, (REF 3/16 X 5/16 X 1/16), 3/8" SUBPLATE PILOT

12	1	SPK-16	KIT - SUBPLATE MOUNT, 2" SUBPLATE VALVES
11	1	ESR3PHC	3/8" SUBPLATE, SNGL SOL, 2 POS, FRCTN POS, PILOT RTRN, HIGH TEMP COIL, 120/60, SIDE VENT
10	2	MFC2	ASSEMBLY - MUFFLER FLOW CONTROL, 1/4" NPT
9	3	V-337	PLUG, SOCKET 1/4-18 FLUSH SEAL PLUG
8	2	V-124	O-RING, BUNA-N, 70 DURO, AS-231, (REF 2-5/8 X 2-7/8 X 1/8), 2 POS, 1-1/2" & 2" VALVES
7	2	V-89	O-RING, BUNA-N, 70 DURO, AS-110, (REF 3/8 X 9/16 X 3/32), 1" & 2" SUBPLATE PILOT
6	2	V-231	PLUG, SOCKET PRESSURE 1/16-27X 7/8 TAPER FOR 122V,192V,FOR EC
5	12	V-143	SCREW, 5/16-18 X 2, SOCKET HEAD CAP
4	2	PEC12E	ENDCAP - PILOT, SOLID, 6061-T6 AL, 1-1/2" & 2" VALVES
3	1	S12	SPOOL - STANDARD, 2 POS - 3 POS CLOSED CTR, 1 1/2" & 2" VALVE
2	6	V-123	O-RING, BUNA-N, 70 DURO, AS-331, (REF 2-1/4 X 2-5/8 X 3/16), 1-1/2" & 2" VALVES
1	1	BP16-6	BODY, 2" SUBPLATE, PIGGY BACK
FLG	QTY	PART NO	DESCRIPTION

LIMITS ON DIMENSIONS UNLESS OTHERWISE SPECIFIED
2-PL DECIMAL ± .01
3-PL DECIMAL ± .005
FRACTIONAL ± 1/64
ANGULAR ± 1/2'

AAA PRODUCTS INTERNATIONAL
7114 Harry Hines Blvd
Dallas, TX 75235

DRAWN: RMcKenna DATE: 3/22/2016
CHECKED: KWaite DATE: 3/22/2016
SCALE: 1/2 SHEET: 1 OF 1
RELEASED: HWomack DATE: 3/22/2016

TITLE: 2" SUBPLATE, SNGL SOL, 2 POS, FRICTION POS, SPRING RTRN, HIGH TEMP COIL, 120/60, SIDE VENT

PART NO.: ESR16PHC

REV.:

THE INFORMATION CONTAINED WITHIN THIS DOCUMENT IS PROPRIETARY TO AAA PRODUCTS AND MAY NOT BE DISCLOSED WITHOUT PRIOR WRITTEN CONSENT

D:\Engineering\Product\Valve\Assembly\Standard\SPK\DWG\ESR16PHC.dw