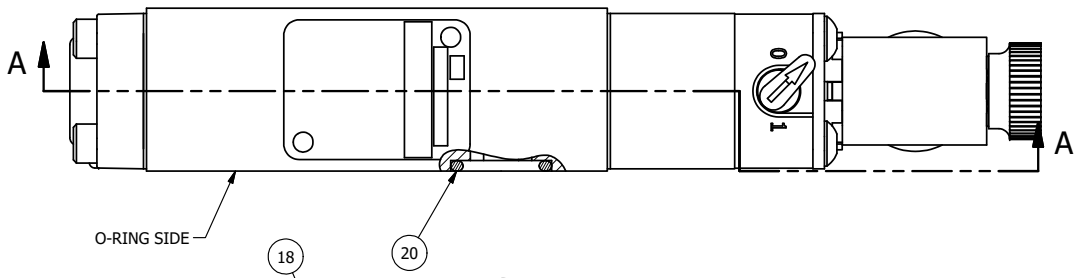

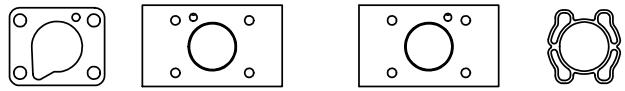

POSITION GASKET ON END OF VALVE TO SEAL PILOT HOLE SIDE 'B' ONLY

ALIGN PILOT AND SLOT IN ADAPTOR WITH GASKET IN BETWEEN SIDE 'A' ONLY FOR EXTERNAL PILOT OPERATION - ROTATE ADAPTOR 180 DEGREES. REMOVE 1/8" NPTF PLUG AND SUPPLY 50-150 PSI TO 1/8" NPTF PILOT PORT IN ADAPTOR.

NOTES:
1) ALWAYS GIVE VALVE MODEL AND PART NUMBER WHEN ORDERING PARTS.
2) FOR DIFFERENT VOLTAGES OTHER THAN 120/60, REPLACE SOLENOID COIL WITH COIL LISTED IN TABLE BELOW.
3) LUBRICATE DETENT BALL, SPRING AND STUD.

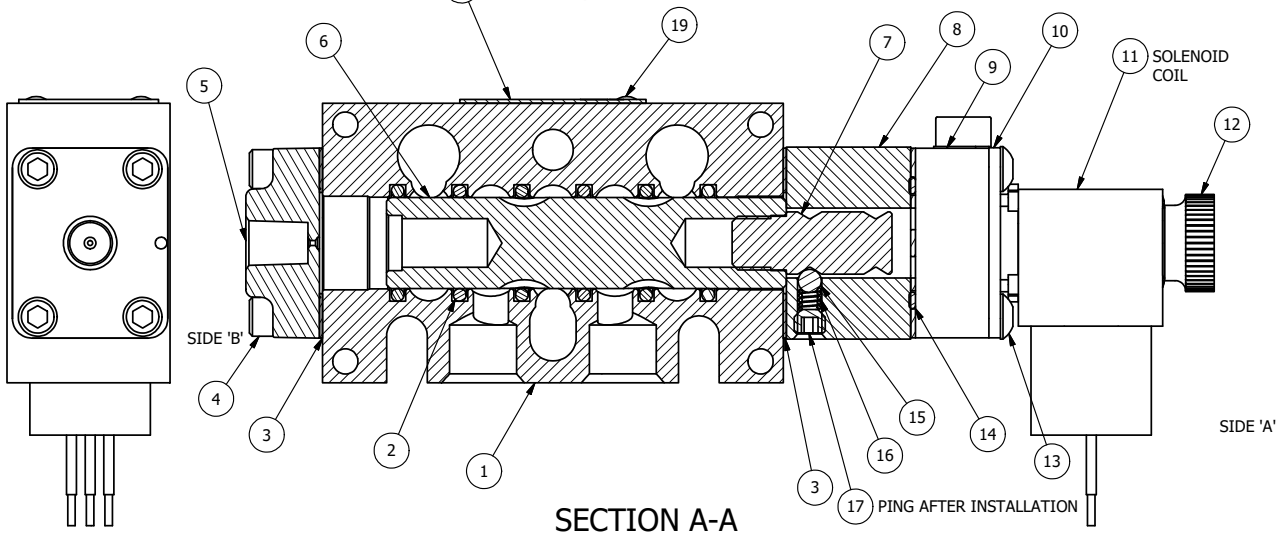

SECTION A-A
SCALE 1 : 1

FLG	QTY	PART NO	DESCRIPTION
20	3	V-110	O-RING, BUNA-N, 70 DURO, AS-114, (REF 5/8 X 13/16 X 3/32), 1/4" SLEEVE, 1/2" SUB, STACK
19	2	V-212	SCREW, #2 X 3/16 DRIVE, TYPE U, OVAL HEAD, STAINLESS STEEL
18	1	AN-114	NAMEPLATE, BLANK, FOR VALVES WITH SPRINGS OR DETENTS
17	1	V-21	SCREW, 1/4-20 X 3/16, SOCKET SET, CUP POINT
16	1	DS3	SPRING - DETENT, 1/4" & 3/8" VALVE
15	1	V-14	BALL, CHROME STEEL 3/16 DIA, GRADE 25, FOR DETENT
14	1	EMG3	GASKET - END MOUNT SOLENOID, BUNA-N, 1/4" & 3/8" VALVES
13	4	V-585	SCREW, 10-24 X 2-1/8, SOCKET BUTTON HEAD
12	1	V-567W	E SERIES SINTERED BRONZE MUFFLER, DUST EXCLUDER, V-613 LOCK WASHER
11	1	V-600-1	COIL - 1/2 NPTF HUB 120V 50/60HZ, NASS P/N 0561 44.1-00/4984
10	1	SEC3-7	PLATE, RE-INFORCEMENT, SOLENOID, STAMPED, 304 STAINLESS
9	1	V-599-1	SOL OPER, END MOUNT, LOCKING O'RIDE
8	1	PEC3-18	ENDCAP, SPACER, DETENT, SOLENOID, 6061-T6, 1/4" & 3/8" VALVES
7	1	PBS3-13	STUD - POS. A & C. DETENT, 1/4" & 3/8" VALVE
6	1	S3R	SPOOL - SOLID, STANDARD, 2 POS, CLSD CTR, 1/4" & 3/8" VALVE
5	1	PEC3	END CAP, PILOT, 380 AL, 1/4" & 3/8" VALVE
4	4	V-38	SCREW, 10-24 X 3/4, SOCKET HEAD CAP
3	2	ECG3	GASKET - END CAP, 1/4" & 3/8" VALVE
2	6	V-39	O-RING, VITON, STD BODY, 1/4" & 3/8" VALVES
1	1	B3-10E	FINISHED - SOLID BODY, UPPER PILOTS, 3/8" STACKING VALVE

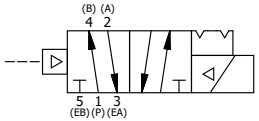

COIL VOLTAGES	
PART NO	REPLACE COIL
EBSR3JOLQ 12 VDC	V-600-2
EBSR3JOLQ 24VDC	V-600-3
EBSR3JOLQ 240/60	V-600-4

LIMITS ON DIMENSIONS UNLESS OTHERWISE SPECIFIED
2-PL DECIMAL ± .01
3-PL DECIMAL ± .005
FRACTIONAL ± 1/64
ANGULAR ± 1/2'

AAA PRODUCTS INTERNATIONAL
7114 Harry Hines Blvd
Dallas, TX 75235

DRAWN: RMcKenna	DATE: 6/18/2022	CHECKED: KWaite	DATE: 6/18/2022
SCALE: 1 : 1	SHEET: 1 OF 1	RELEASED: HWomack	DATE: 6/18/2022

TITLE: 3/8" STACK, SNGL SOL, 2 POS, DTNT, PLT RTRN, MOLD-OVER, 120/60, LKNG OVRD, DUST EXCLDR

PART NO.: EBSR3JOLQ

REV.:

THE INFORMATION CONTAINED WITHIN THIS DOCUMENT IS PROPRIETARY TO AAA PRODUCTS AND MAY NOT BE DISCLOSED WITHOUT PRIOR WRITTEN CONSENT

D:\Engineering\Product\Valves\Assembly\standard\SR\DWG\EBSR3JOLQ.dwg