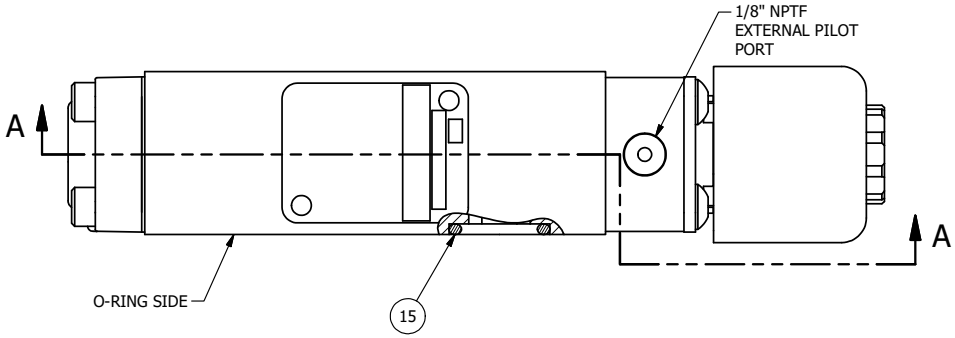

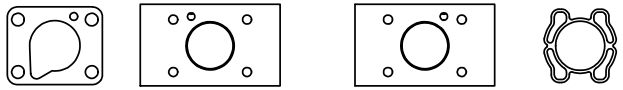

POSITION GASKET ON END OF VALVE
TO SEAL PILOT HOLE
SIDE 'B' ONLY

ALIGN PILOT AND SLOT IN ADAPTOR
WITH GASKET IN BETWEEN, SIDE 'A' ONLY
(ADAPTOR SHOULD BE INSTALLED AS SHOWN)
SUPPLY 50-150 PSI TO 1/8" NPTF PILOT PORT IN ADAPTOR.

NOTES:
1) ALWAYS GIVE VALVE MODEL AND PART NUMBER WHEN ORDERING PARTS.
2) FOR DIFFERENT VOLTAGES OTHER THAN 120/60, REPLACE SOLENOID COIL WITH COIL LISTED IN TABLE BELOW.

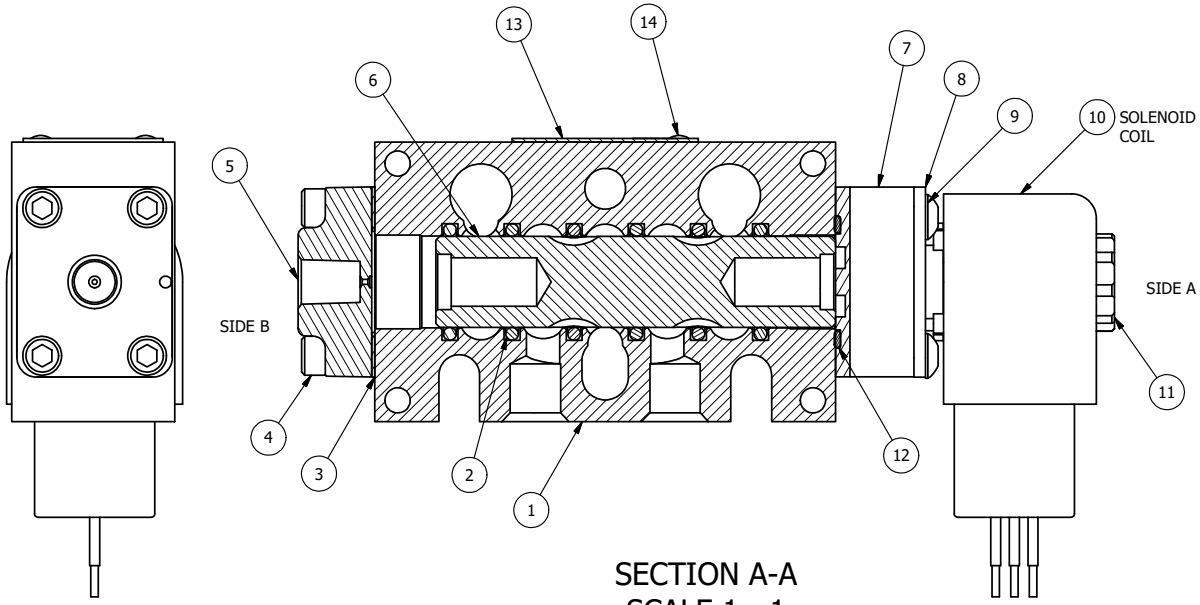

SECTION A-A
SCALE 1 : 1

FLG	QTY	PART NO	DESCRIPTION
15	3	V-110	O-RING, BUNA-N, 70 DURO, AS-114, (REF 5/8 X 13/16 X 3/32), 1/4" SLEEVE, 1/2" SUB, STACK
14	2	V-212	SCREW, #2 X 3/16 DRIVE, TYPE U, OVAL HEAD, STAINLESS STEEL
13	1	AN-115	NAMEPLATE, BLANK, FOR HE,KE,KD,RR,D,CR,PP,SR,SS VALVES
12	1	EMG3	GASKET - END MOUNT SOLENOID, BUNA-N, 1/4" & 3/8" VALVES
11	1	V-556	NUT, SOLENOID, TOP EXHAUST, KNURLED
10	1	V-593-1	COIL - 120VAC EXP PROOF, 1/2" NPTF STAINLESS CONNECTION, NASS #0568 05.1-00/6874
9	4	V-584	SCREW, 10-24 X 1, BUTTON HEAD SOCKET CAP WITH MICROSPHERE APPLIED TO THREADS.
8	1	SEC3-7	PLATE, RE-INFORCEMENT, SOLENOID, STAMPED, 304 STAINLESS
7	1	V-550-1	SOL OPER, END MOUNT, NON-LOCKING O'RIDE
6	1	S3R	SPOOL - SOLID, STANDARD, 2 POS, CLSD CTR, 1/4" & 3/8" VALVE
5	1	PEC3	END CAP, PILOT, 380 AL, 1/4" & 3/8" VALVE
4	4	V-38	SCREW, 10-24 X 3/4, SOCKET HEAD CAP
3	1	ECG3	GASKET - END CAP, 1/4" & 3/8" VALVE
2	6	V-39	O-RING, VITON, STD BODY, 1/4" & 3/8" VALVES
1	1	B2-10E	FINISHED - SOLID BODY, UPPER PILOTS, 1/4" STACKING VALVE

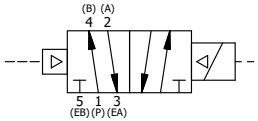

COIL VOLTAGES	
PART NO	REPLACE COIL
EBSR2XZ 240/60	V-593-4
EBSR2XZ 24VDC	V-593-3
EBSR2XZ 12 VDC	V-593-2

LIMITS ON DIMENSIONS UNLESS OTHERWISE SPECIFIED
2-PL DECIMAL ± .01
3-PL DECIMAL ± .005
FRACTIONAL ± 1/64
ANGULAR ± 1/2'

AAA PRODUCTS INTERNATIONAL
7114 Harry Hines Blvd
Dallas, TX 75235

DRAWN: RMcKenna DATE: 6/3/2016
CHECKED: KWaite DATE: 6/3/2016
SCALE: 1 : 1 SHEET: 1 OF 1
RELEASED: HWomack DATE: 6/3/2016

TITLE:
1/4" STACK, SNGL SOL, 2 POS,
FRICTION POS, PILOT RTRN,
EXPL PROOF, 120/60, EXT PILOT

PART NO.: EBSR2XZ
REV.:

THE INFORMATION CONTAINED WITHIN THIS DOCUMENT IS PROPRIETARY TO AAA PRODUCTS AND MAY NOT BE DISCLOSED WITHOUT PRIOR WRITTEN CONSENT

D:\Engineering\Product\Valve\Assembly\Standard\SR\DWG\EBSR2XZ.dw