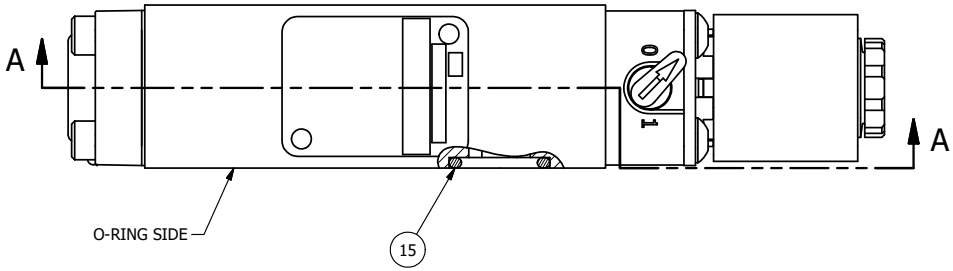

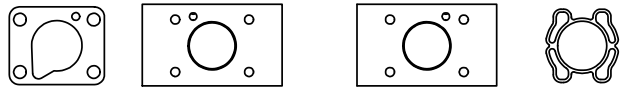

POSITION GASKET ON END OF VALVE
TO SEAL PILOT HOLE
SIDE 'B' ONLY

ALIGN PILOT AND SLOT IN ADAPTOR
WITH GASKET IN BETWEEN SIDE 'A' ONLY
FOR EXTERNAL PILOT OPERATION - ROTATE ADAPTOR
180 DEGREES. REMOVE 1/8" NPTF PLUG AND
SUPPLY 50-150 PSI TO 1/8" NPTF PILOT PORT IN ADAPTOR.

NOTES:
1) ALWAYS GIVE VALVE MODEL AND PART NUMBER WHEN ORDERING PARTS.
2) FOR DIFFERENT VOLTAGES OTHER THAN 120/60, REPLACE SOLENOID COIL WITH COIL LISTED IN TABLE BELOW.

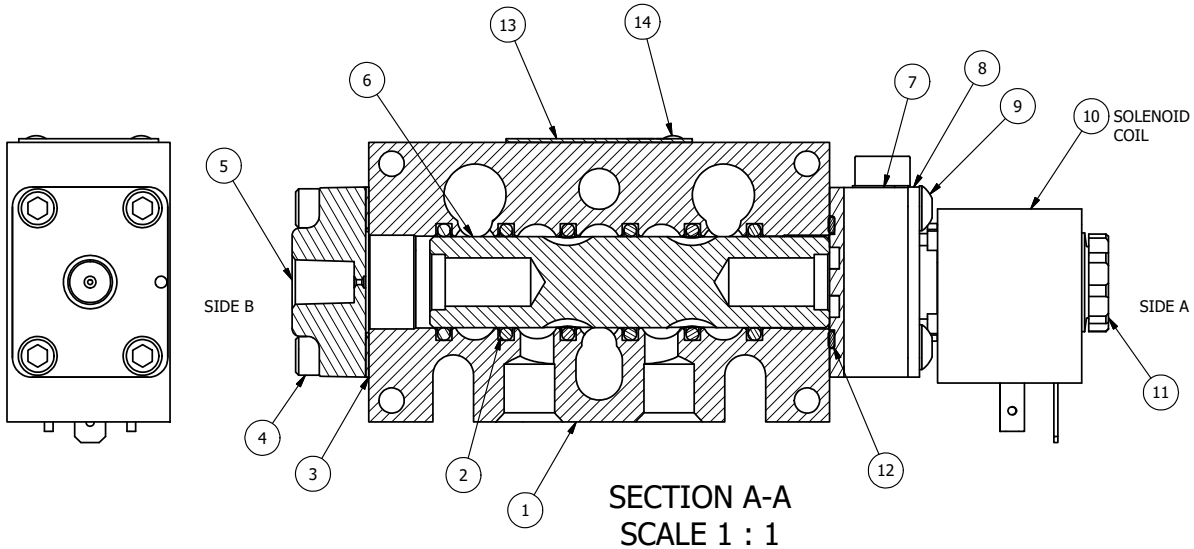

SECTION A-A
SCALE 1 : 1

FLG	QTY	PART NO	DESCRIPTION
15	3	V-110	O-RING, BUNA-N, 70 DURO, AS-114, (REF 5/8 X 13/16 X 3/32), 1/4" SLEEVE, 1/2" SUB, STACK
14	2	V-212	SCREW, #2 X 3/16 DRIVE, TYPE U, OVAL HEAD, STAINLESS STEEL
13	1	AN-115	NAMEPLATE, BLANK, FOR HE,KE,KD,RR,D,CR,PP,SR,SS VALVES
12	1	EMG3	GASKET - END MOUNT SOLENOID, BUNA-N, 1/4" & 3/8" VALVES
11	1	V-556	NUT, SOLENOID, TOP EXHAUST, KNURLED
10	1	V-603-1	COIL HI-TEMP. 8-30T 120/60. NASS # 0558 55.1-00/7121.
9	4	V-584	SCREW, 10-24 X 1, BUTTON HEAD SOCKET CAP WITH MICROSPHERE APPLIED TO THREADS.
8	1	SEC3-7	PLATE, RE-INFORCEMENT, SOLENOID, STAMPED, 304 STAINLESS
7	1	V-599-1	SOL OPER, END MOUNT, LOCKING O'RIDE
6	1	S3R	SPOOL - SOLID, STANDARD, 2 POS, CLSD CTR, 1/4" & 3/8" VALVE
5	1	PEC3	END CAP, PILOT, 380 AL, 1/4" & 3/8" VALVE
4	4	V-38	SCREW, 10-24 X 3/4, SOCKET HEAD CAP
3	1	ECG3	GASKET - END CAP, 1/4" & 3/8" VALVE
2	6	V-39	O-RING, VITON, STD BODY, 1/4" & 3/8" VALVES
1	1	B2-10E	FINISHED - SOLID BODY, UPPER PILOTS, 1/4" STACKING VALVE

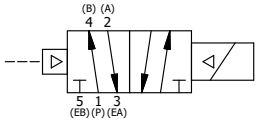

COIL VOLTAGES	
PART NO	REPLACE COIL
EBSR2HO 12 VDC	V-603-2

LIMITS ON DIMENSIONS UNLESS OTHERWISE SPECIFIED
2-PL DECIMAL ± .01
3-PL DECIMAL ± .005
FRACTIONAL ± 1/64
ANGULAR ± 1/2'

AAA PRODUCTS INTERNATIONAL
7114 Harry Hines Blvd
Dallas, TX 75235

DRAWN: RMcKenna	DATE: 1/15/2016	CHECKED: KWaite	DATE: 1/15/2016
SCALE: 1 : 1	SHEET: 1 OF 1	RELEASED: HWomack	DATE: 1/15/2016

TITLE:
1/4" STACK, SNGL SOL, 2 POS,
FRICTION POS, PILOT RTRN,
HIGH TMP COIL, 120/60, LCKNG OVRD

PART NO.: EBSR2HO

REV.:

THE INFORMATION CONTAINED WITHIN THIS DOCUMENT IS PROPRIETARY TO AAA PRODUCTS AND MAY NOT BE DISCLOSED WITHOUT PRIOR WRITTEN CONSENT

D:\Engineering\Product\Valve\Assembly\Standard\SR\DWG\EBSR2HO.dwg