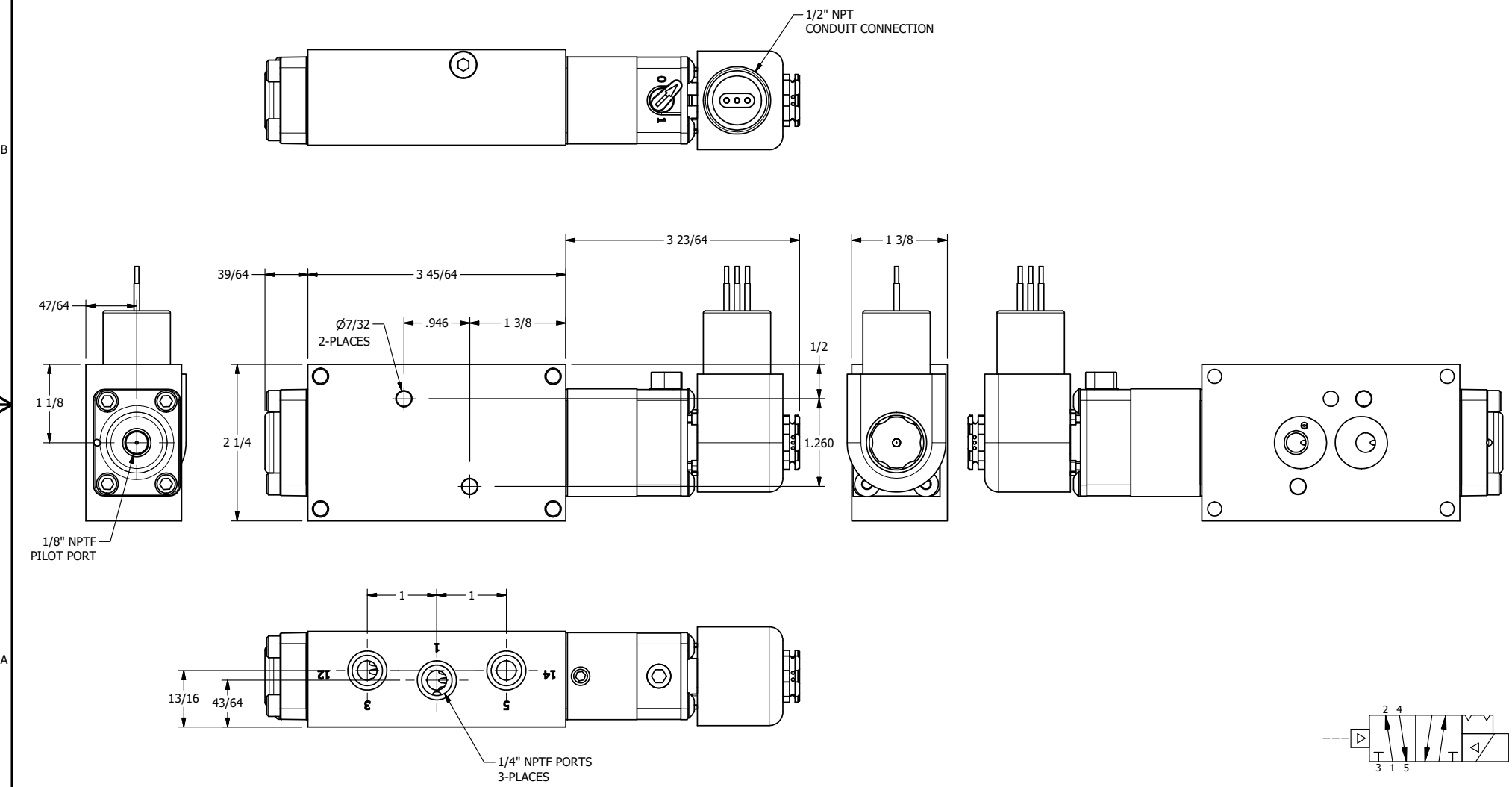

AAA PRODUCTS INTERNATIONAL 7114 Harry Hines Blvd Dallas, TX 75235	TITLE: 1/4" NAMUR, SNGL SOL, 2 POS, DTNT, PLT RTRN, EXPL PROOF, BR & SS, LKNG OVRD, SIDE VENT	DRAWING NO.: DIM_ZNSR2XOCQ

THE INFORMATION CONTAINED WITHIN THIS DOCUMENT IS PROPRIETARY TO AAA PRODUCTS AND MAY NOT BE DISCLOSED WITHOUT PRIOR WRITTEN CONSENT