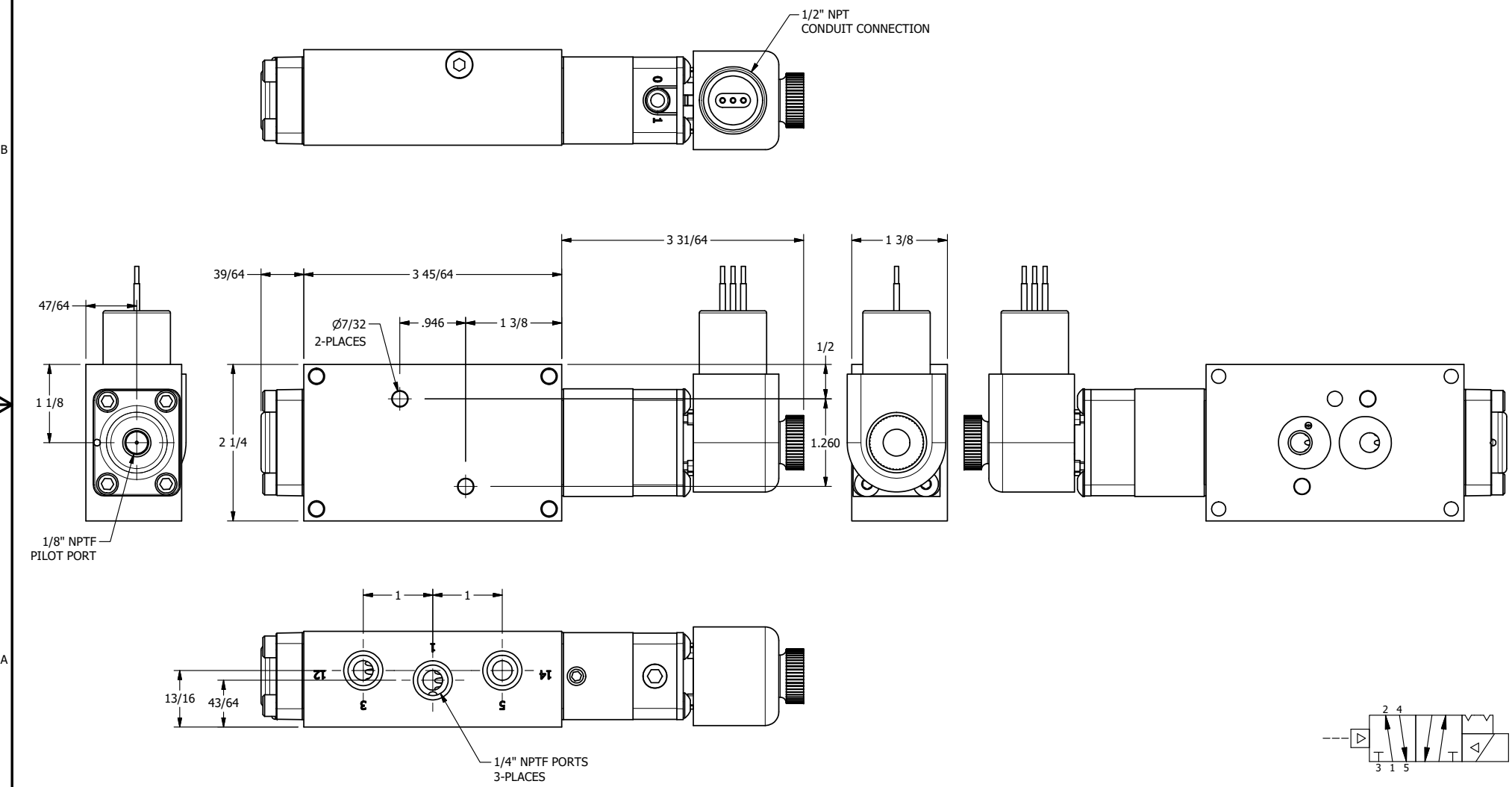

AAA PRODUCTS INTERNATIONAL
7114 Harry Hines Blvd
Dallas, TX 75235

TITLE: 1/4" NAMUR, SNGL SOL, 2 POS, DTNT, PLT RTRN, EXPL PROOF, BR & SS, DUST EXLDR

DRAWING NO.: DIM_ZNSR2XLQ

THE INFORMATION CONTAINED WITHIN THIS DOCUMENT IS PROPRIETARY TO AAA PRODUCTS AND MAY NOT BE DISCLOSED WITHOUT PRIOR WRITTEN CONSENT