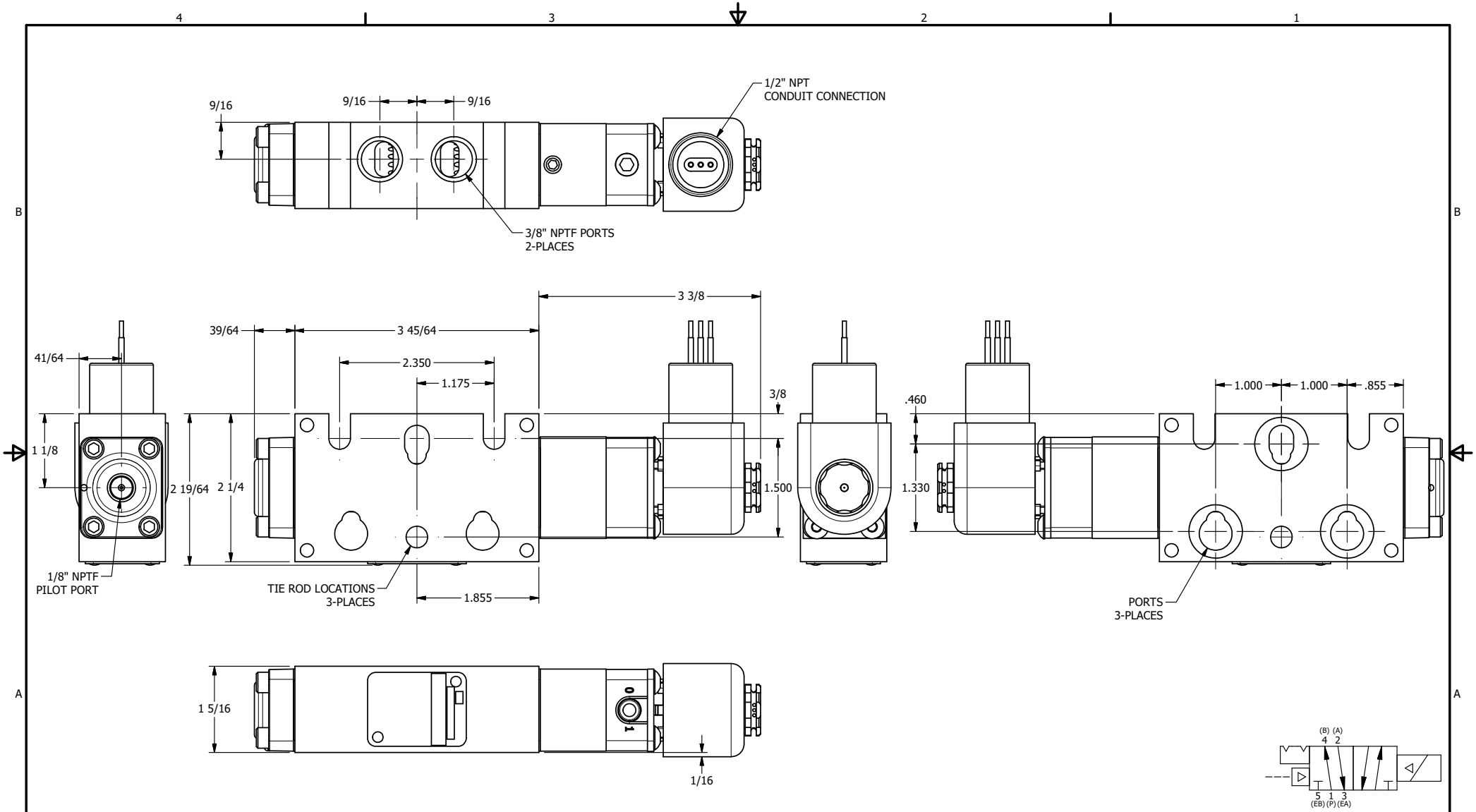

AAA PRODUCTS INTERNATIONAL
7114 Harry Hines Blvd
Dallas, TX 75235

TITLE: 3/8" STACK, SNGL SOL, 2 POS, DTNT, PLT RTRN, EXPL PROOF, SIDE VENT

DRAWING NO.: DIM_EBSR3XCQ

THE INFORMATION CONTAINED WITHIN THIS DOCUMENT IS PROPRIETARY TO AAA PRODUCTS AND MAY NOT BE DISCLOSED WITHOUT PRIOR WRITTEN CONSENT