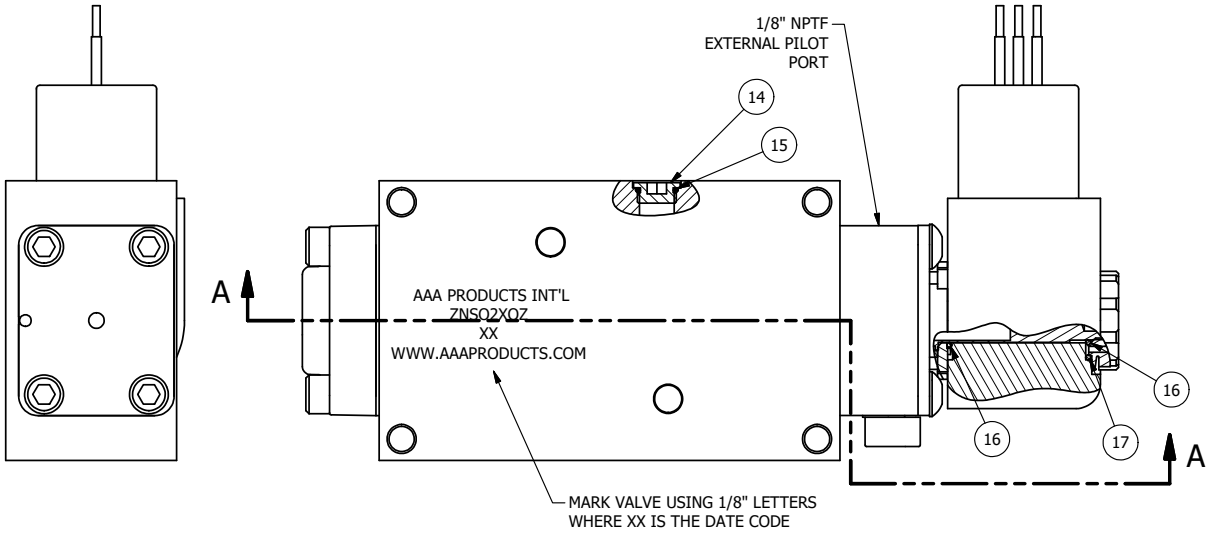

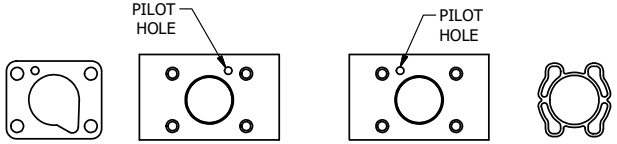

POSITION GASKET TO SEAL PILOT HOLE ON SIDE 'B' ONLY.

ALIGN PILOT AND SLOT IN ADAPTOR WITH GASKET IN BETWEEN, SIDE 'A' ONLY (ADAPTOR SHOULD BE INSTALLED AS SHOWN) SUPPLY 50-150 PSI TO 1/8" NPTF PILOT PORT IN ADAPTOR.

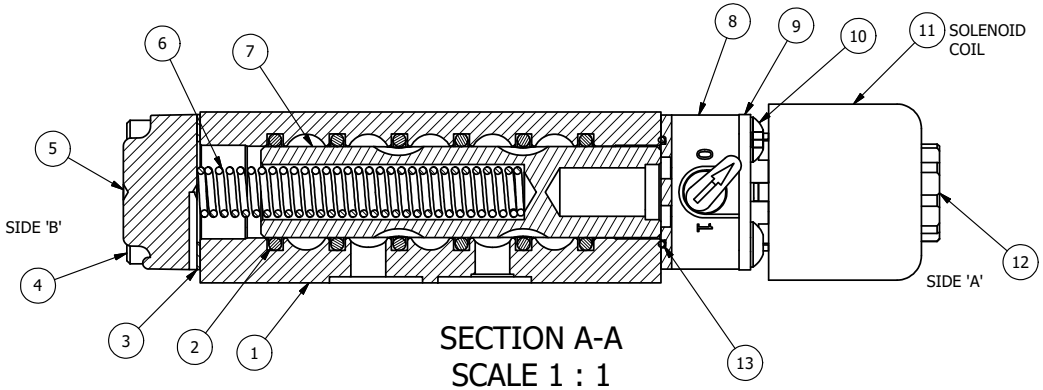

SECTION A-A
SCALE 1 : 1
VIEW FROM 3 PORT SIDE

18	1	ZNSPK-2	KIT - SUBPLATE MOUNTING, BRASS NAMUR, (2 EA V-618-SS SCREW, 2 EA V-565 O-RING)
17	1	V-607	O-RING, VITON, 75 DURO, 14MM X 1MM, IP67 NUT SEAL
16	2	V-606	O-RING, VITON, 75 DURO, 8MM X 1MM, IP67 STEM SEAL
15	1	V-548	O-RING, BUNA-N, 70 DURO, 6MM X 1MM, NAMUR PLUG
14	1	V-547	PLUG, 360 HALF HARD BRASS, NAMUR VALVE
13	1	EMG3	GASKET - END MOUNT SOLENOID, BUNA-N, 1/4" & 3/8" VALVES
12	1	V-556	NUT, SOLENOID, TOP EXHAUST, KNURLED
11	1	V-593-1	COIL - 120VAC EXP PROOF, 1/2" NPTF STAINLESS CONNECTION, NASS #0568 05.1-00/6874
10	4	V-584-SS	SCREW, 10-24 X 1, BUTTON HEAD SOCKET CAP, 18-8 OR 303 STAINLESS
9	1	SEC3-7	PLATE, RE-INFORCEMENT, SOLENOID, STAMPED, 304 STAINLESS
8	1	V-599-1	SOL OPER, END MOUNT, LOCKING O'RIDE
7	1	S3	SPOOL - STANDARD, 2 POS, CLSD CTR, 1/4" & 3/8" VALVE
6	1	CS3	SPRING - RETURN, (EXCEPT HO, KO & PO) 1/4" & 3/8" VALVES
5	1	SEC3-3	END CAP, VENTED, STAINLESS STEEL, 1/4" & 3/8" VALVES
4	4	V-38-SS	SCREW, 10-24 X 3/4, SOCKET HEAD CAP, 18-8 STAINLESS
3	1	ECG3	GASKET - END CAP, 1/4" & 3/8" VALVE
2	6	V-39	O-RING, VITON, STD BODY, 1/4" & 3/8" VALVES
1	1	Z2-11	BODY - BRASS, UPPER PILOTS (BUTTON BLEEDER), 1/4" NAMUR
FLG	QTY	PART NO	DESCRIPTION

NOTES:
1) ALWAYS GIVE VALVE MODEL AND PART NUMBER WHEN ORDERING PARTS.
2) FOR DIFFERENT VOLTAGES OTHER THAN 120/60, REPLACE SOLENOID COIL WITH COIL LISTED IN TABLE BELOW.

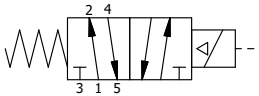

COIL VOLTAGES	
PART NO	REPLACE COIL
ZNSO2XOZ 12VDC	V-593-2
ZNSO2XOZ 24VDC	V-593-3
ZNSO2XOZ 240/60	V-593-4

LIMITS ON DIMENSIONS UNLESS OTHERWISE SPECIFIED
2-PL DECIMAL ± .01
3-PL DECIMAL ± .005
FRACTIONAL ± 1/64
ANGULAR ± 1/2'

AAA PRODUCTS INTERNATIONAL
7114 Harry Hines Blvd
Dallas, TX 75235

DRAWN: RMcKenna	DATE: 7/10/2026	CHECKED: KWaite	DATE: 7/10/2026
SCALE: 1 : 1	SHEET: 1 OF 1	RELEASED: HWomack	DATE: 7/10/2026

TITLE: 1/4" NAMUR, SNGL SOL, 2 POS, SPR RTRN, EXPL PROOF, 120/60, LCKG OVRD, EXT PILOT, BR & SS

PART NO.: ZNSO2XOZ

REV.:

THE INFORMATION CONTAINED WITHIN THIS DOCUMENT IS PROPRIETARY TO AAA PRODUCTS AND MAY NOT BE DISCLOSED WITHOUT PRIOR WRITTEN CONSENT

D:\Engineering\Product\Valves\Assembly\standard\SOL\DWG\ZNSO2XOZ.dw