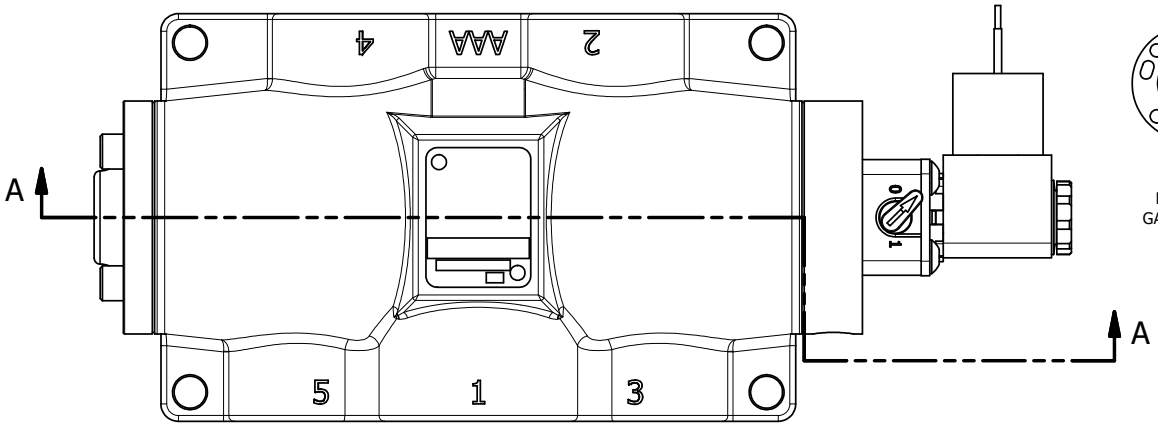

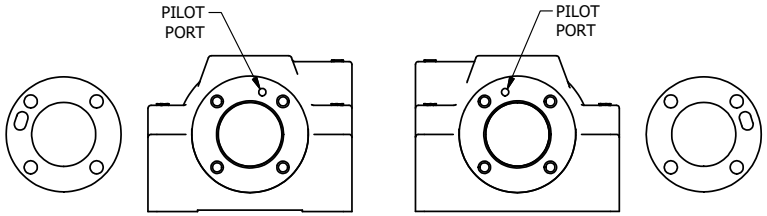

POSITION GASKET ON END OF VALVE SO GASKET COVERS PILOT HOLE, SIDE 'B' ONLY

POSITION GASKET TO SEAL PILOT HOLE, BOTH SIDES. THE ROUND ALUMINUM ADAPTOR IS ROTATED 90 DEGREES. SUPPLY 50-160 PSI TO 1/8" NPTF PILOT PORT IN ADAPTOR.

NOTES:
1) ALWAYS GIVE VALVE MODEL AND PART NUMBER WHEN ORDERING PARTS.
2) FOR DIFFERENT VOLTAGES OTHER THAN 120/60, REPLACE SOLENOID COIL WITH COIL LISTED IN TABLE BELOW.

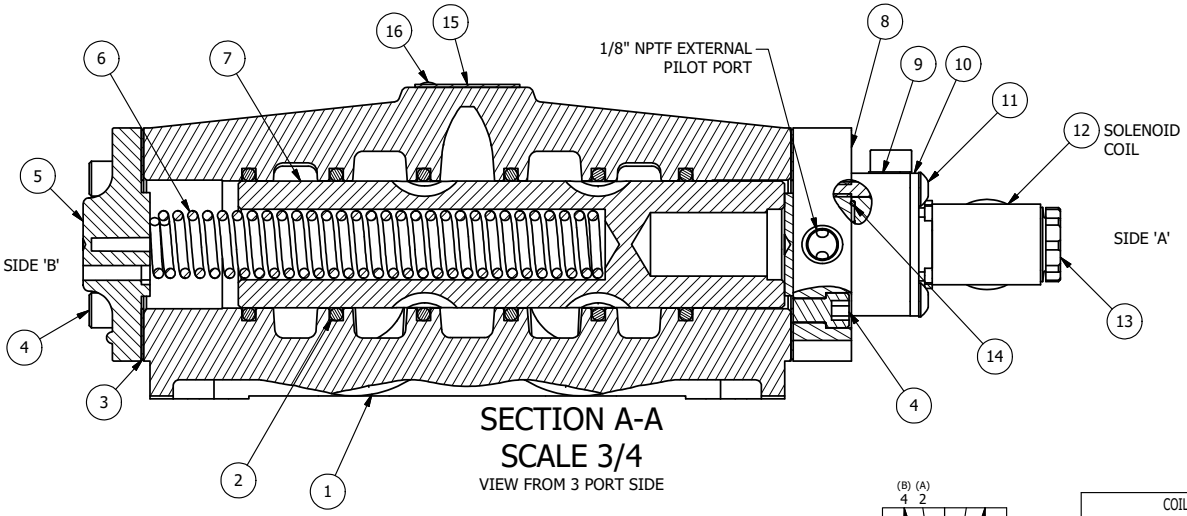

SECTION A-A
SCALE 3/4
VIEW FROM 3 PORT SIDE

FLG	QTY	PART NO	DESCRIPTION
16	2	V-212	SCREW, #2 X 3/16 DRIVE, TYPE U, OVAL HEAD, STAINLESS STEEL
15	1	AN-114	NAMEPLATE, BLANK, FOR VALVES WITH SPRINGS OR DETENTS
14	1	EMG3	GASKET - END MOUNT SOLENOID, BUNA-N, 1/4" & 3/8" VALVES
13	1	V-556	NUT, SOLENOID, TOP EXHAUST, KNURLED
12	1	V-600-1	COIL - 1/2 NPTF HUB 120V 50/60HZ, NASS P/N 0561 44.1-00/4984
11	4	V-584	SCREW, 10-24 X 1, BUTTON HEAD SOCKET CAP, W/ND 593 BLUE MICROSPHERES
10	1	SEC3-7	PLATE, RE-INFORCEMENT, SOLENOID, STAMPED, 304 STAINLESS
9	1	V-599-1	SOL OPER, END MOUNT, LOCKING O'RIDE
8	1	SSA48-1E	ADAPTOR, END MNT SOLENOID, 1/2", 3/4" & 1" VALVE
7	1	S8	SPOOL - STANDARD, 2 POS, CLSD CTR, 3/4" & 1" VALVE
6	1	CS8	SPRING - RETURN, 3/4" & 1" VALVES
5	1	PEC48-3	END CAP, VENTED, 380 AL, 1/2", 3/4" & 1" VALVES
4	8	V-46	SCREW, 1/4-20 X 3/4, SOCKET HEAD CAP
3	2	ECG48	GASKET - END CAP, 1/2", 3/4" & 1" VALVE
2	6	V-30	O-RING, BUNA-N, 70 DURO, AS-220, (REF 1-3/8 X 1-5/8 X 1/8), 3/4" & 1" VALVES
1	1	B8-1	BODY, 1" SIDE PORT, UPPER PILOTS, ANODIZED

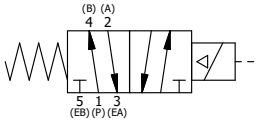

COIL VOLTAGES	
PART NO	REPLACE COIL
ESO8JOZ 12VDC	V-600-2
ESO8JOZ 24VDC	V-600-3
ESO8JOZ 240/60	V-600-4

LIMITS ON DIMENSIONS UNLESS OTHERWISE SPECIFIED
2-PL DECIMAL ± .01
3-PL DECIMAL ± .005
FRACTIONAL ± 1/64
ANGULAR ± 1/2'

AAA PRODUCTS INTERNATIONAL
7114 Harry Hines Blvd
Dallas, TX 75235

DRAWN: RMcKenna	DATE: 7/6/2026	CHECKED: KWaite	DATE: 7/6/2026
SCALE: 1 : 1	SHEET: 1 OF 1	RELEASED: HWomack	DATE: 7/6/2026

TITLE:
1" SIDE PORT, SNGL SOL, 2 POS, SPRING RTRN, MOLD-OVER, 120/60, LCKNG OVRD, EXT PILOT

PART NO.: ESO8JOZ

REV.:

THE INFORMATION CONTAINED WITHIN THIS DOCUMENT IS PROPRIETARY TO AAA PRODUCTS AND MAY NOT BE DISCLOSED WITHOUT PRIOR WRITTEN CONSENT

D:\Engineering\Product\Valves\Assembly\standard\ESO1\DWG\ESO8JOZ.dw