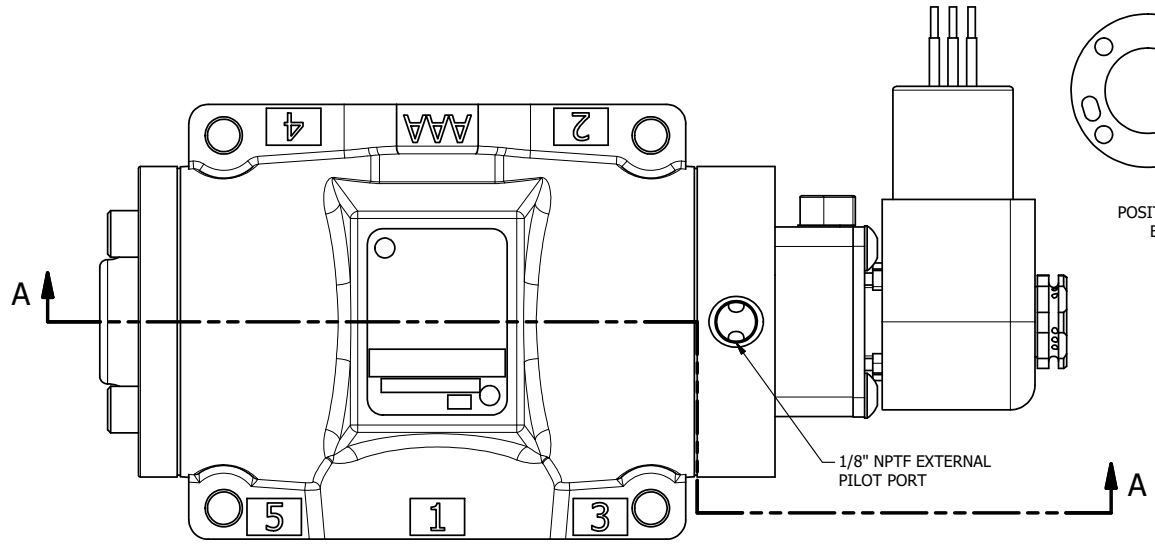

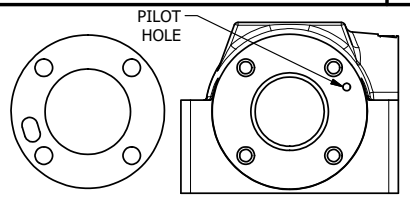

POSITION GASKET TO SEAL PILOT HOLE
BOTH SIDES (SIDE 'B' SHOWN).

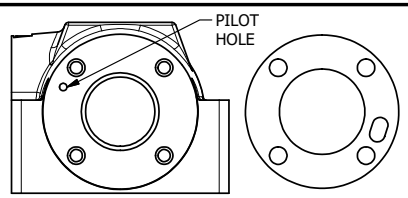

POSITION GASKET TO SEAL PILOT HOLE, BOTH SIDES.
THE ROUND ALUMINUM ADAPTOR IS ROTATED 180 DEGREES.
SUPPLY 50-150 PSI TO 1/8" NPTF PILOT PORT IN ADAPTOR.

NOTES:
1) ALWAYS GIVE VALVE MODEL AND PART NUMBER WHEN ORDERING PARTS.
2) FOR DIFFERENT VOLTAGES OTHER THAN 120/60, REPLACE SOLENOID COIL WITH COIL LISTED IN TABLE BELOW.

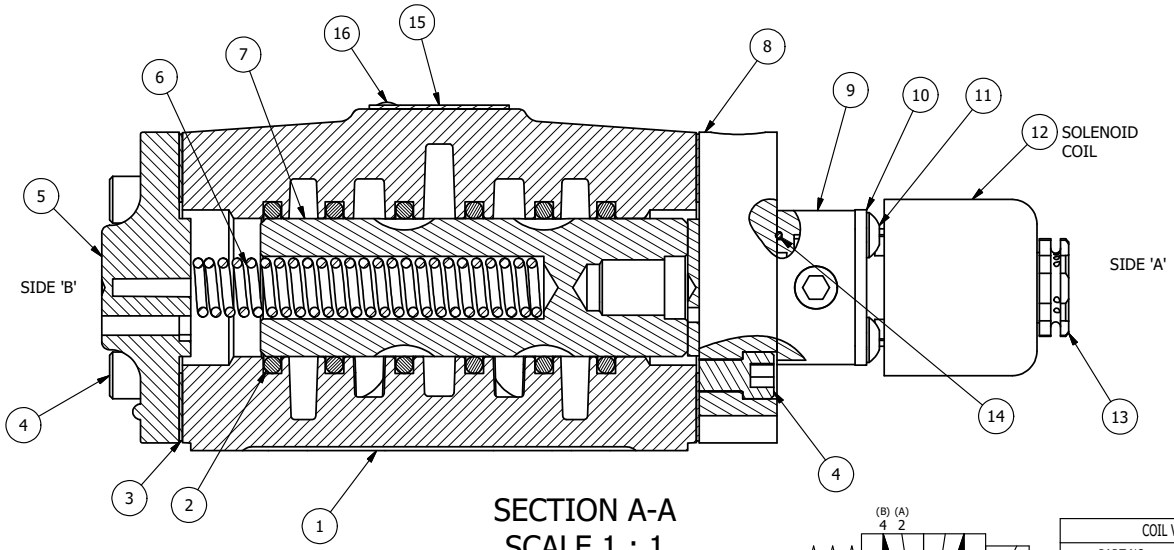

SECTION A-A
SCALE 1 : 1
VIEW FROM 3 PORT SIDE

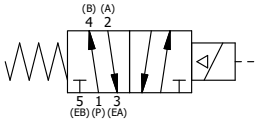

FLG	QTY	PART NO	DESCRIPTION
16	2	V-212	SCREW, #2 X 3/16 DRIVE, TYPE U, OVAL HEAD, STAINLESS STEEL
15	1	AN-114	NAMEPLATE, BLANK, FOR VALVES WITH SPRINGS OR DETENTS
14	1	EMG3	GASKET - END MOUNT SOLENOID, BUNA-N, 1/4" & 3/8" VALVES
13	1	V-562	NUT, SOLENOID, SIDE EXHAUST
12	1	V-593-1	COIL - 120VAC EXP PROOF, 1/2" NPTF STAINLESS CONNECTION, NASS #0568 05.1-00/6874
11	4	V-584	SCREW, 10-24 X 1, BUTTON HEAD SOCKET CAP, W/ND 593 BLUE MICROSPHERES
10	1	SEC3-7	PLATE, RE-INFORCEMENT, SOLENOID, STAMPED, 304 STAINLESS
9	1	V-599-1	SOL OPER, END MOUNT, LOCKING O'RIDE
8	1	SSA48-1E	ADAPTOR, END MNT SOLENOID, 1/2", 3/4" & 1" VALVE
7	1	S4	SPOOL - STANDARD, 2 POS, CLSD CTR, 1/2" VALVE
6	1	CS4	SPRING - RETURN, 1/2" VALVES
5	1	PEC48-3	END CAP, VENTED, 380 AL, 1/2", 3/4" & 1" VALVES
4	8	V-46	SCREW, 1/4-20 X 3/4, SOCKET HEAD CAP
3	2	ECG48	GASKET - END CAP, 1/2", 3/4" & 1" VALVE
2	6	V-6	O-RING, BUNA-N, 70 DURO, AS-216, (REF 1-1/8 X 1-3/8 X 1/8), 1/2" VALVES, 1" SUBPLATE
1	1	B4-1	BODY, 1/2" SIDE PORT, UPPER PILOTS, ANODIZED

COIL VOLTAGES	
PART NO	REPLACE COIL
ESO4XOCZ 12VDC	V-593-2
ESO4XOCZ 24VDC	V-593-3
ESO4XOCZ 240/60	V-593-4

LIMITS ON DIMENSIONS UNLESS OTHERWISE SPECIFIED
2-PL DECIMAL ± .01
3-PL DECIMAL ± .005
FRACTIONAL ± 1/64
ANGULAR ± 1/2'

AAA PRODUCTS INTERNATIONAL
7114 Harry Hines Blvd
Dallas, TX 75235

DRAWN: RMcKenna	DATE: 7/15/2026	CHECKED: KWaite	DATE: 7/15/2026
SCALE: 1 : 1	SHEET: 1 OF 1	RELEASED: HWomack	DATE: 7/15/2026

TITLE:
1/2" SIDE PORT, SNGL SOL, 2 POS, SPR RTRN, EXPL PROOF, 120/60, LCKN OVRD, SIDE VENT, EXT PILOT

PART NO.: ESO4XOCZ

REV.:

THE INFORMATION CONTAINED WITHIN THIS DOCUMENT IS PROPRIETARY TO AAA PRODUCTS AND MAY NOT BE DISCLOSED WITHOUT PRIOR WRITTEN CONSENT

D:\Engineering\Product\Valves\Assembly\standard\ESO\DWG\ESO4XOCZ.dw