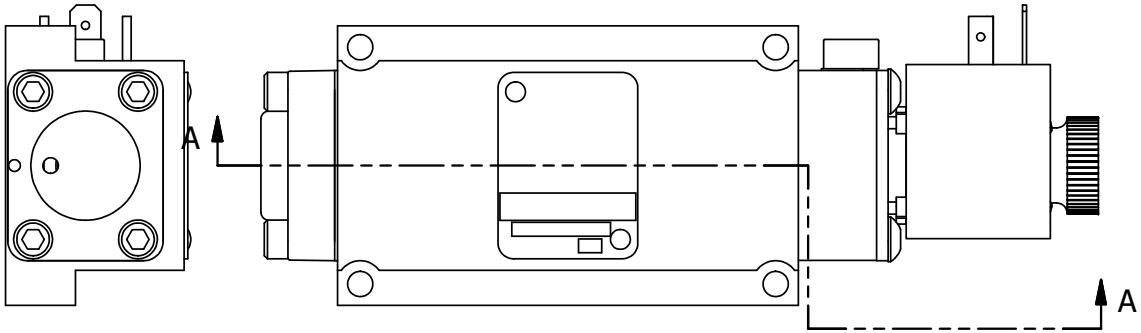

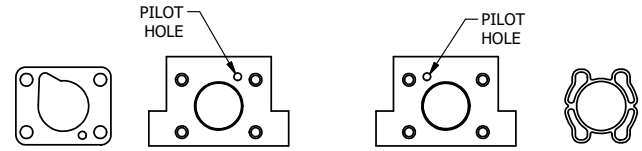

POSITION GASKET TO SEAL PILOT HOLE SIDE 'B' ONLY.

ALIGN PILOT AND SLOT IN ADAPTOR WITH GASKET IN BETWEEN SIDE 'A' ONLY FOR EXTERNAL PILOT OPERATION - ROTATE ADAPTOR 180 DEGREES. REMOVE 1/8" NPTF PLUG AND SUPPLY 50-150 PSI TO 1/8" NPTF PILOT PORT IN ADAPTOR.

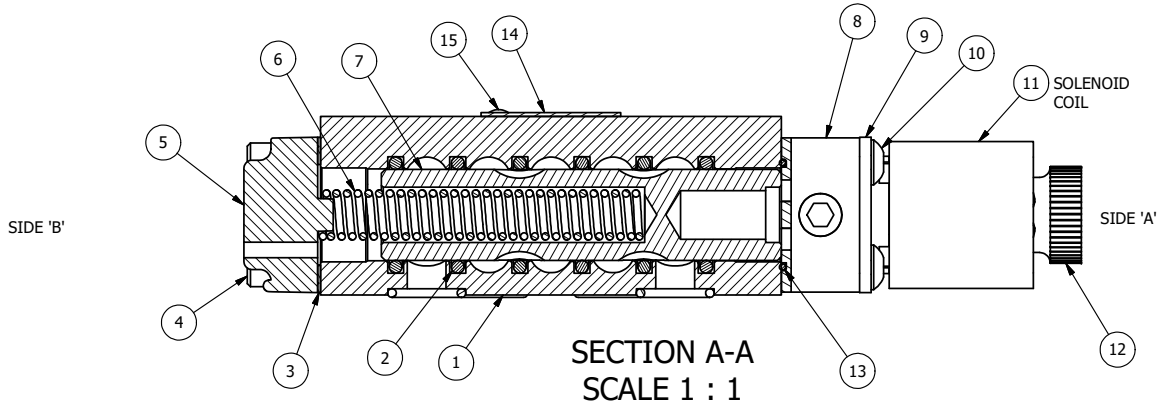

SECTION A-A
SCALE 1 : 1
VIEW FROM 3 PORT SIDE

FLG	QTY	PART NO	DESCRIPTION
16	1	SPK-3	KIT - SUBPLATE MOUNTING, 3/8" SUBPLATE VALVES
15	2	V-212	SCREW, #2 X 3/16 DRIVE, TYPE U, OVAL HEAD, STAINLESS STEEL
14	1	AN-114	NAMEPLATE, BLANK, FOR VALVES WITH SPRINGS OR DETENTS
13	1	EMG3	GASKET - END MOUNT SOLENOID, BUNA-N, 1/4" & 3/8" VALVES
12	1	V-567W	E SERIES SINTERED BRONZE MUFFLER, DUST EXCLUDER, V-613 LOCK WASHER
11	1	V-603-1	COIL HI-TEMP. 8-30T 120/60. NASS # 0558 55.1-00/7121.
10	4	V-584	SCREW, 10-24 X 1, BUTTON HEAD SOCKET CAP WITH MICROSPHERE APPLIED TO THREADS.
9	1	SEC3-7	PLATE, RE-INFORCEMENT, SOLENOID, STAMPED, 304 STAINLESS
8	1	V-599-1	SOL OPER, END MOUNT, LOCKING O'RIDE
7	1	S3	SPOOL - STANDARD, 2 POS, CLSD CTR, 1/4" & 3/8" VALVE
6	1	CS3	SPRING - RETURN, (EXCEPT HO, KO & PO) 1/4" & 3/8" VALVES
5	1	SEC3-A	END CAP, VENTED, SPRING BOSS, 380 AL, 1/4" & 3/8" VALVE
4	4	V-38	SCREW, 10-24 X 3/4, SOCKET HEAD CAP
3	1	ECG3	GASKET - END CAP, 1/4" & 3/8" VALVE
2	6	V-39	O-RING, VITON, STD BODY, 1/4" & 3/8" VALVES
1	1	BP3-1E	BODY - SOLID, BUTTON BLEEDER, ANODIZED, 3/8" SUBPLATE VALVE

NOTES:
1) ALWAYS GIVE VALVE MODEL AND PART NUMBER WHEN ORDERING PARTS.
2) FOR DIFFERENT VOLTAGES OTHER THAN 120/60, REPLACE SOLENOID COIL WITH COIL LISTED IN TABLE BELOW.

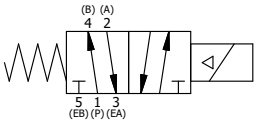

OPERATOR VOLTAGES	
PART NO	REPLACE COIL
ESO3PHOL 12VDC	V-603-2

LIMITS ON DIMENSIONS UNLESS OTHERWISE SPECIFIED
2-PL DECIMAL ± .01
3-PL DECIMAL ± .005
FRACTIONAL ± 1/64
ANGULAR ± 1/2'

AAA PRODUCTS INTERNATIONAL
7114 Harry Hines Blvd
Dallas, TX 75235

DRAWN: RMcKenna	DATE: 2/11/2018	CHECKED: KWaite	DATE: 2/11/2018
SCALE: 1 : 1	SHEET: 1 OF 1	RELEASED: HWomack	DATE: 2/11/2018

TITLE: 3/8" SUBPLATE, SNGL SOL, 2 POS, HIGH TEMP COIL, 120/60, LCKNG OVRD, DUST EXCLDR

PART NO.: ESO3PHOL

REV.:

THE INFORMATION CONTAINED WITHIN THIS DOCUMENT IS PROPRIETARY TO AAA PRODUCTS AND MAY NOT BE DISCLOSED WITHOUT PRIOR WRITTEN CONSENT

D:\Engineering\Product\Valve\Assembly\Standard\ESO\DWG\ESO3PHOL.dw