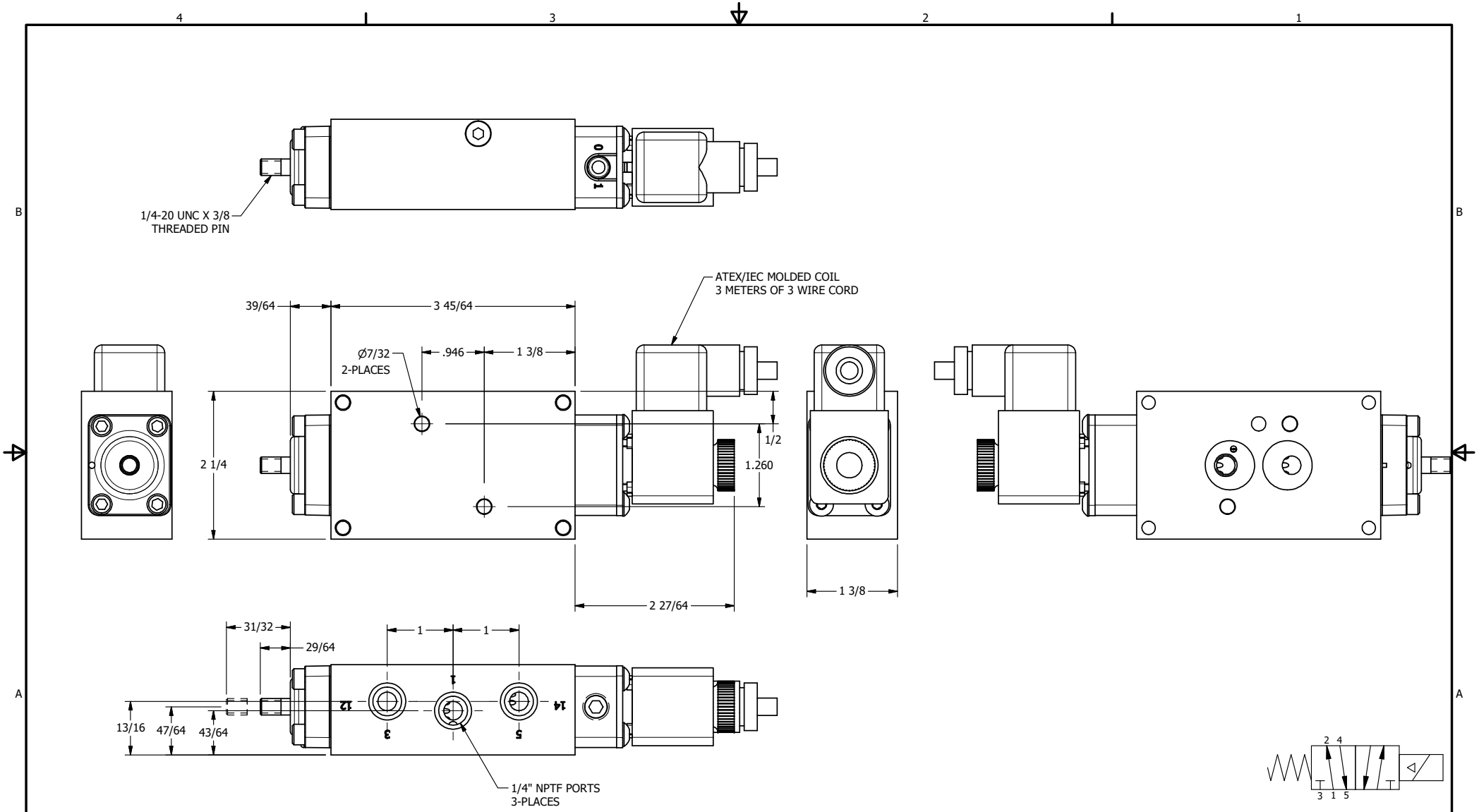

AAA PRODUCTS INTERNATIONAL
7114 Harry Hines Blvd
Dallas, TX 75235

TITLE: 1/4" NAMUR, SNGL SOL, 2 POS, SPR RTRN, ATEX, BR/SS, INDCTR PIN, DUST EXCLDR

DRAWING NO.: DIM_ZNSO2TLK

THE INFORMATION CONTAINED WITHIN THIS DOCUMENT IS PROPRIETARY TO AAA PRODUCTS AND MAY NOT BE DISCLOSED WITHOUT PRIOR WRITTEN CONSENT