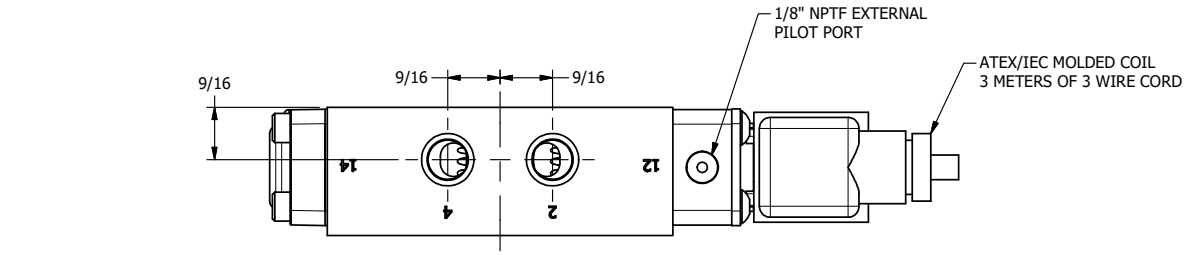

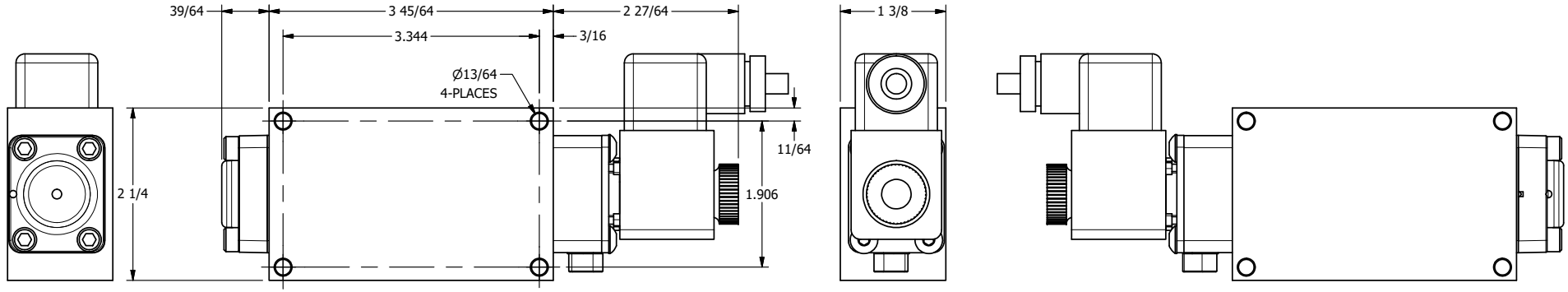

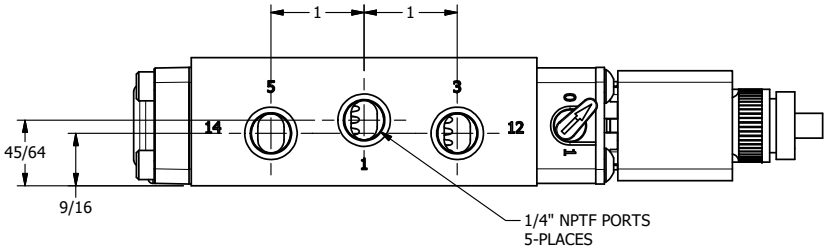

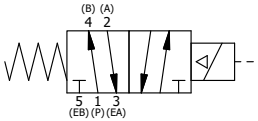

AAA PRODUCTS INTERNATIONAL 7114 Harry Hines Blvd Dallas, TX 75235	TITLE: 1/4" SIDE PORT, SNGL SOL, 2 POS, SPR RTRN, ATEX, LCKN OVRD, DST EX, EXT PLT, BR & SS	DRAWING NO.: DIM_ZESO2TOLZ

THE INFORMATION CONTAINED WITHIN THIS DOCUMENT IS PROPRIETARY TO AAA PRODUCTS AND MAY NOT BE DISCLOSED WITHOUT PRIOR WRITTEN CONSENT