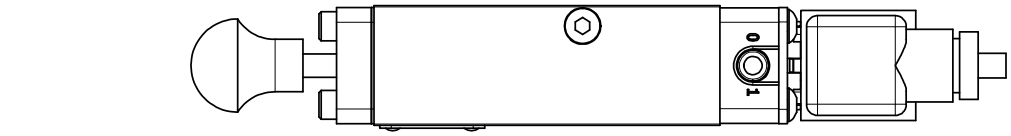

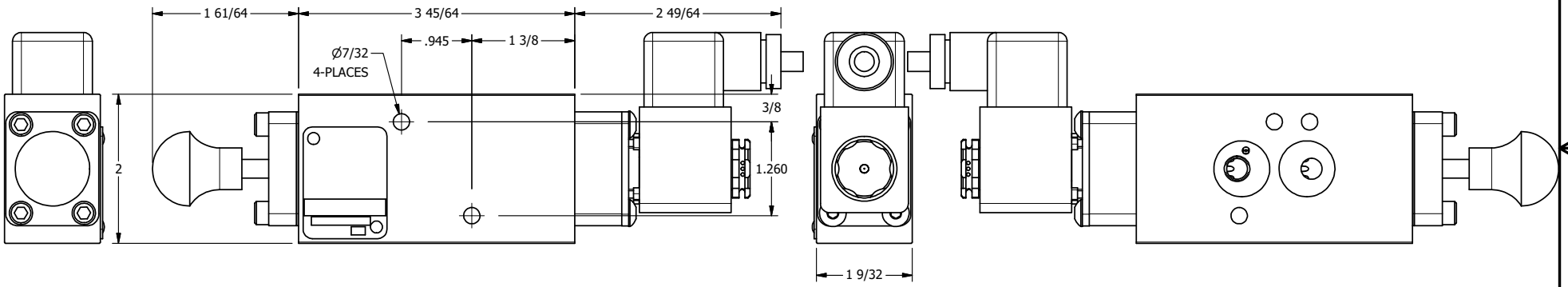

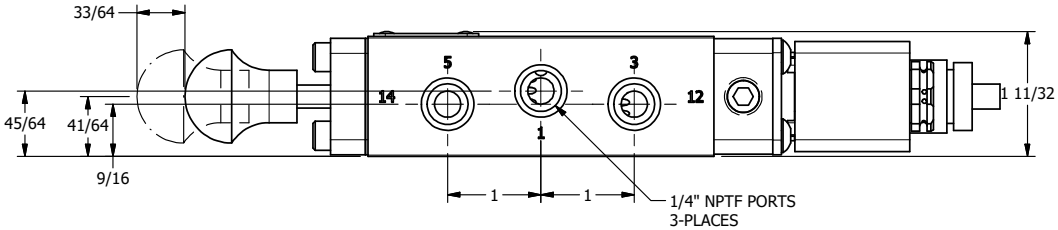

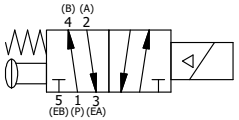

AAA PRODUCTS INTERNATIONAL 7114 Harry Hines Blvd Dallas, TX 75235	TITLE: 1/4" NAMUR, SNGL SOL, 2 POS, SPR RTRN, ATEX, SIDE VENT, SPOOL OVRD	DRAWING NO.: DIM_NSO2TCOS

THE INFORMATION CONTAINED WITHIN THIS DOCUMENT IS PROPRIETARY TO AAA PRODUCTS AND MAY NOT BE DISCLOSED WITHOUT PRIOR WRITTEN CONSENT