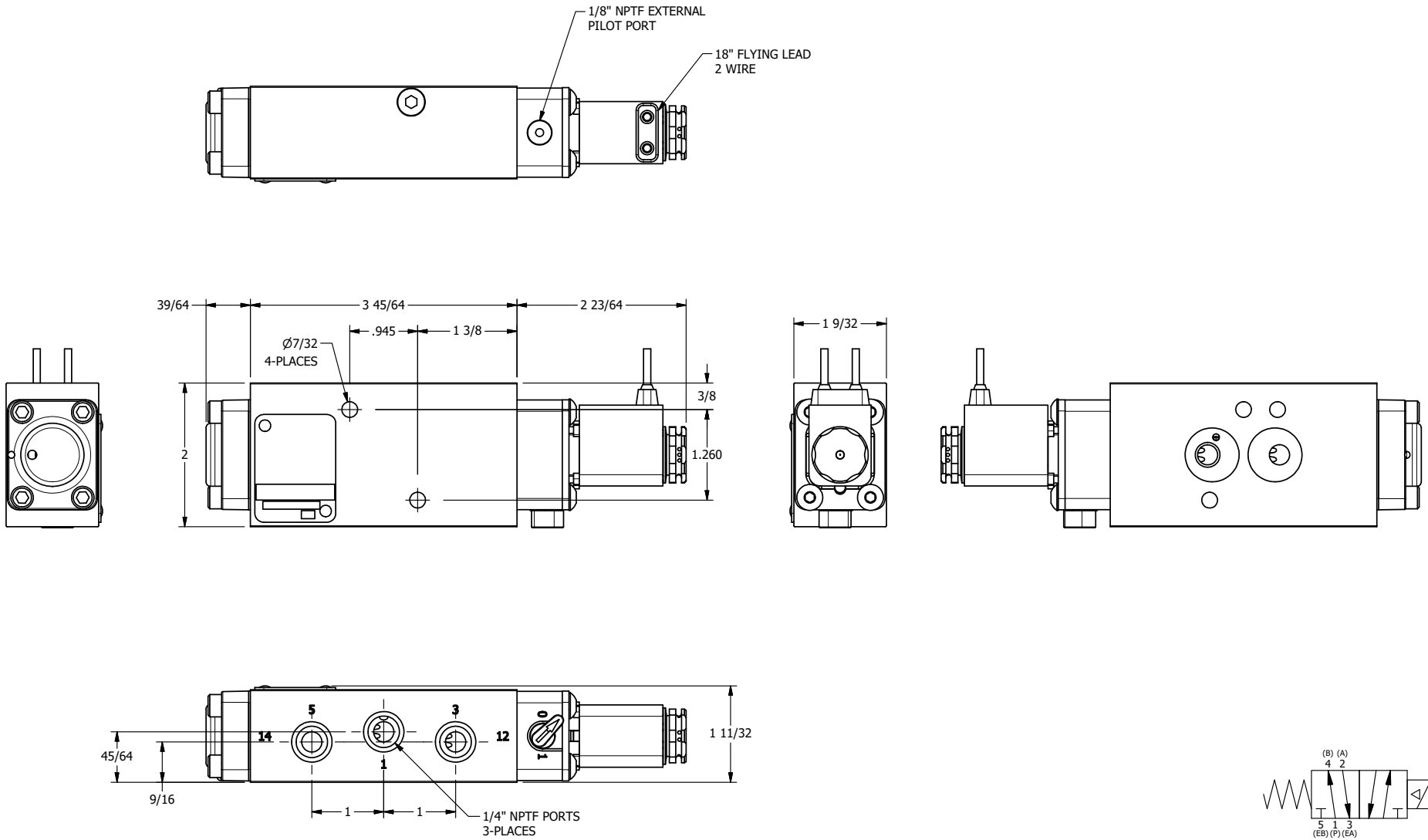

AAA PRODUCTS INTERNATIONAL
7114 Harry Hines Blvd
Dallas, TX 75235

TITLE: 1/4" NAMUR, SNGL SOL, 2 POS, SPR RTRN, FLYING LEAD, LCKN OVRD, SIDE VENT, EXT PILOT

DRAWING NO.: DIM_NSO2MOCZ

THE INFORMATION CONTAINED WITHIN THIS DOCUMENT IS PROPRIETARY TO AAA PRODUCTS AND MAY NOT BE DISCLOSED WITHOUT PRIOR WRITTEN CONSENT