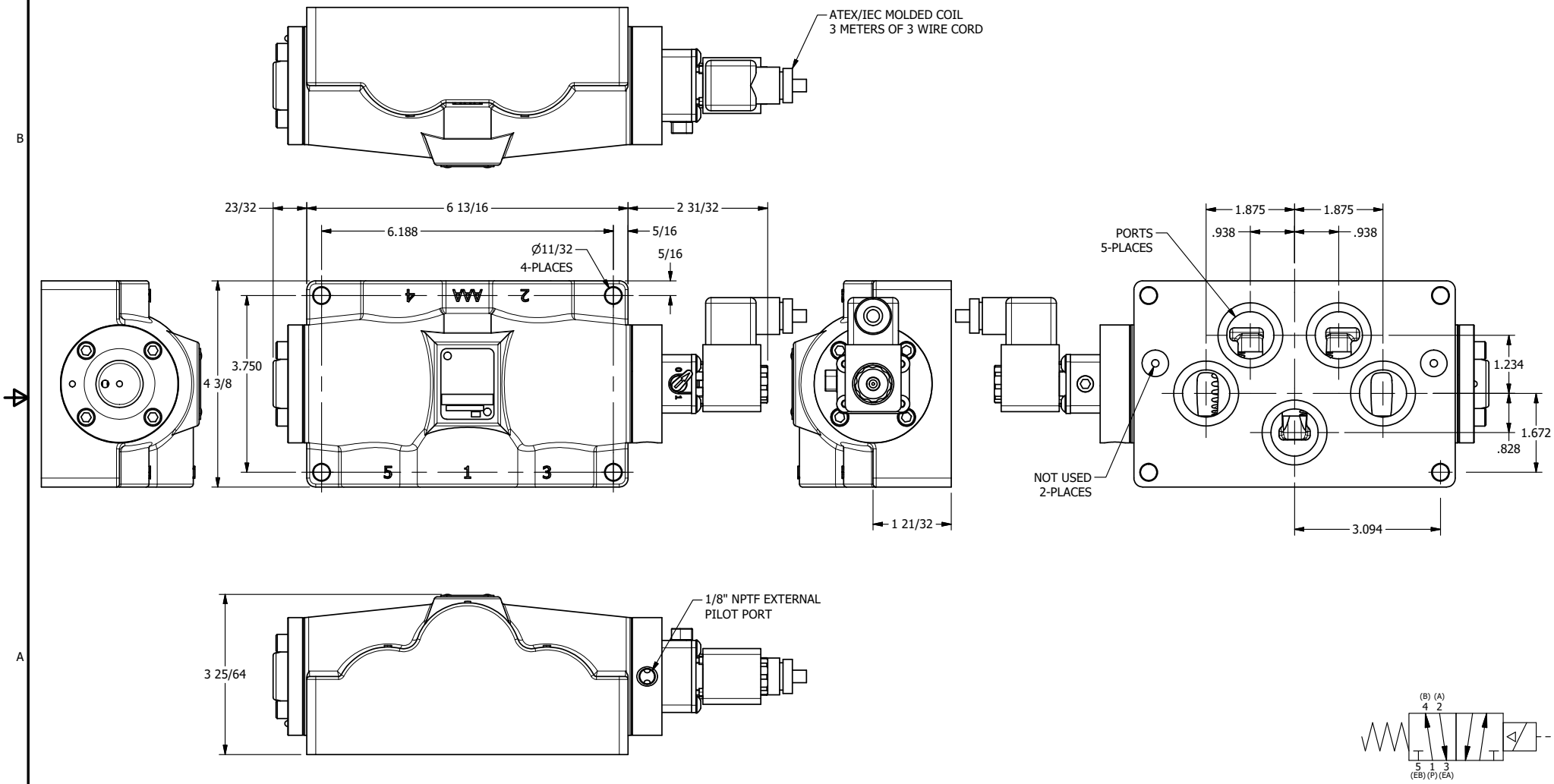


**AAA PRODUCTS INTERNATIONAL**
7114 Harry Hines Blvd
Dallas, TX 75235

TITLE: 1" SIDE PORT, SNGL SOL, 2 POS, SPR RTRN, ATEX, LCKG OVRD, EXT PILOT

DRAWING NO.: DIM_ESO8PTOZ

THE INFORMATION CONTAINED WITHIN THIS DOCUMENT IS PROPRIETARY TO AAA PRODUCTS AND MAY NOT BE DISCLOSED WITHOUT PRIOR WRITTEN CONSENT