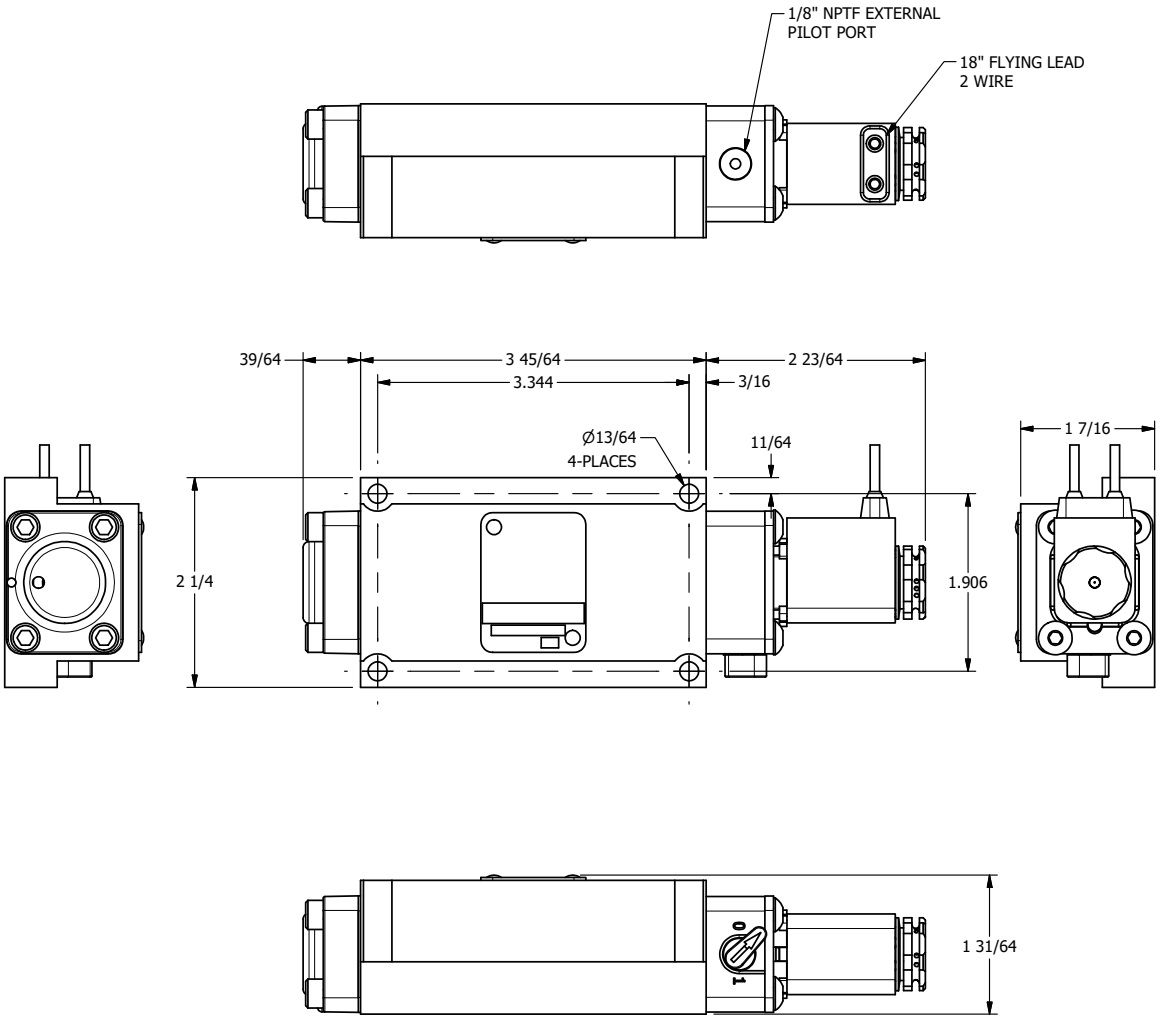

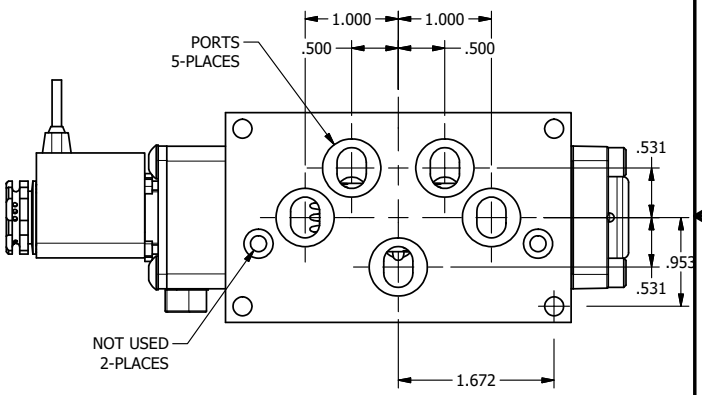

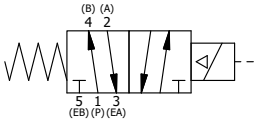

AAA PRODUCTS INTERNATIONAL 7114 Harry Hines Blvd Dallas, TX 75235	TITLE: 3/8" SUBPLATE, SNGL SOL, 2 POS, SPR RTRN, FLYING LEAD, LCKN OVRD, SIDE VENT, EXT PILOT	DRAWING NO.: DIM_ESO3PMOCZ

THE INFORMATION CONTAINED WITHIN THIS DOCUMENT IS PROPRIETARY TO AAA PRODUCTS AND MAY NOT BE DISCLOSED WITHOUT PRIOR WRITTEN CONSENT