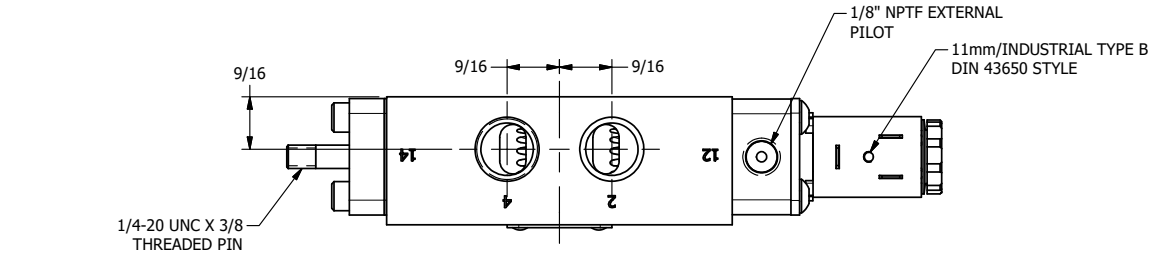

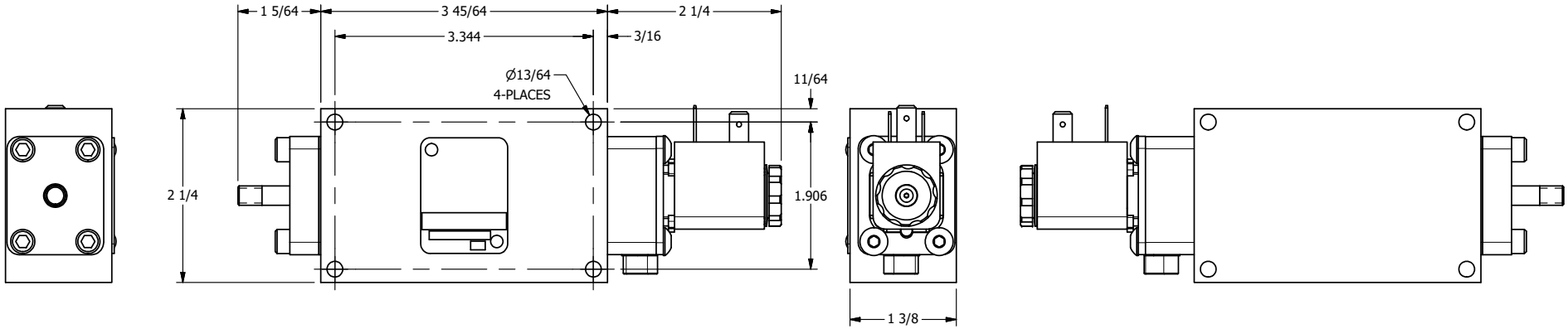

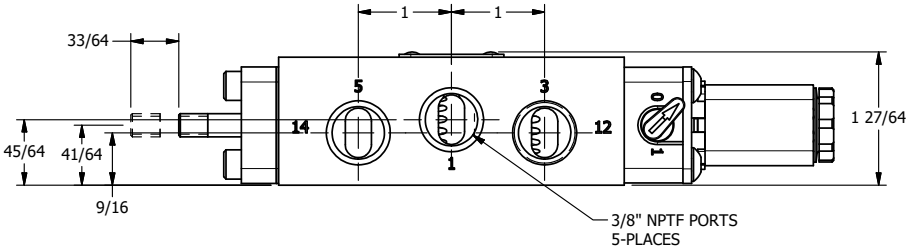

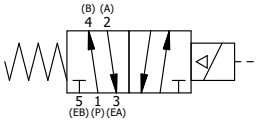

AAA PRODUCTS INTERNATIONAL
7114 Harry Hines Blvd
Dallas, TX 75235

TITLE: 3/8" SIDE PORT, SNGL SOL, 2 POS, SPR RTRN, LCKNG OVRD, IND PIN, EXT PILOT

DRAWING NO.: DIM_ESO3OKZ

THE INFORMATION CONTAINED WITHIN THIS DOCUMENT IS PROPRIETARY TO AAA PRODUCTS AND MAY NOT BE DISCLOSED WITHOUT PRIOR WRITTEN CONSENT