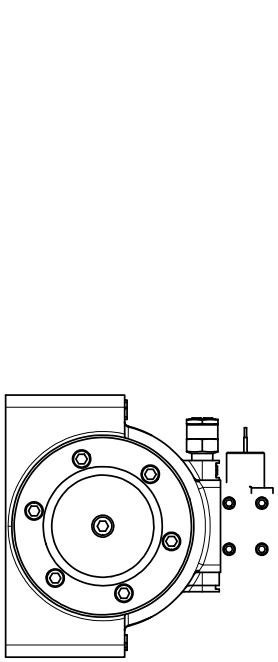

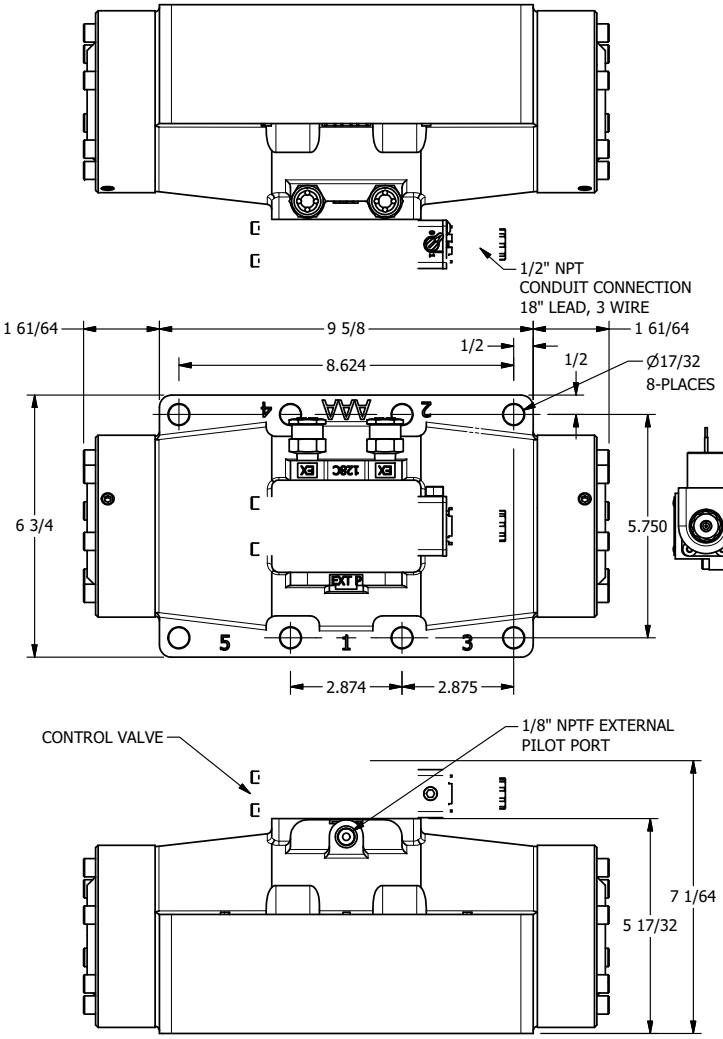

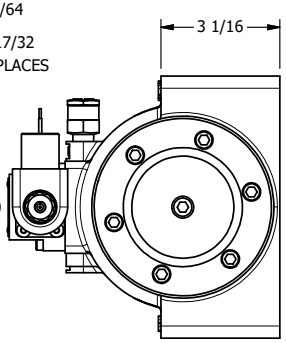

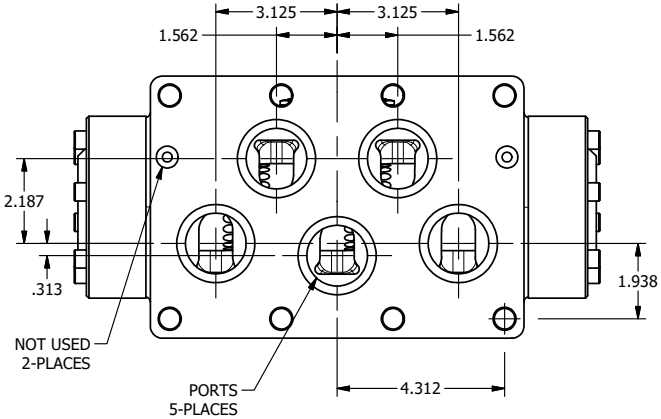

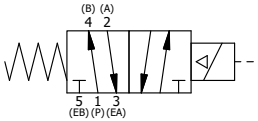

AAA PRODUCTS INTERNATIONAL
7114 Harry Hines Blvd
Dallas, TX 75235

TITLE: 2" SUBPLATE, SNGL SOL, 2 POS, SPR RTRN, EXPL PROOF, LCKNG OVRD, EXT PILOT

DRAWING NO.: DIM_ESO16PXOZ

THE INFORMATION CONTAINED WITHIN THIS DOCUMENT IS PROPRIETARY TO AAA PRODUCTS AND MAY NOT BE DISCLOSED WITHOUT PRIOR WRITTEN CONSENT