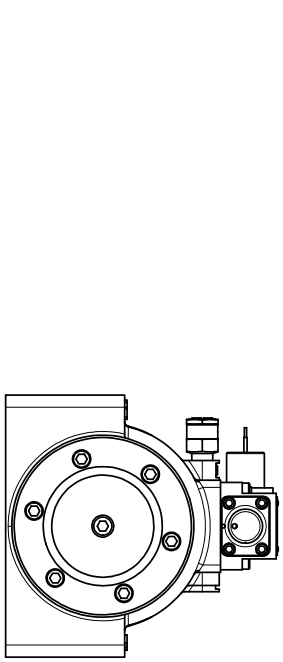

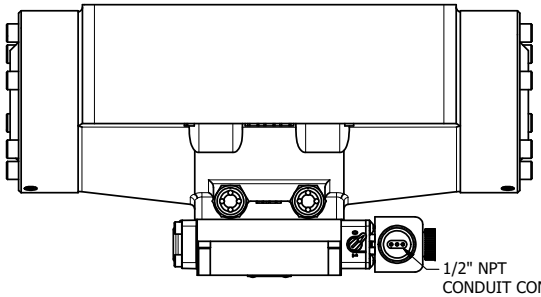

1/2" NPT
CONDUIT CONNECTION
18" LEAD, 3 WIRE

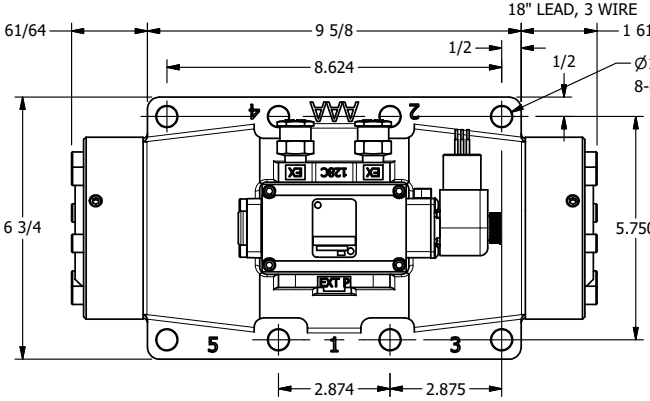

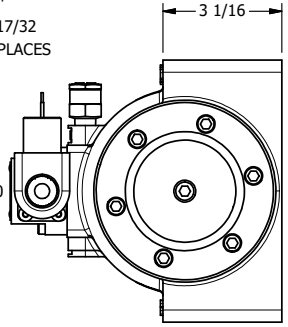

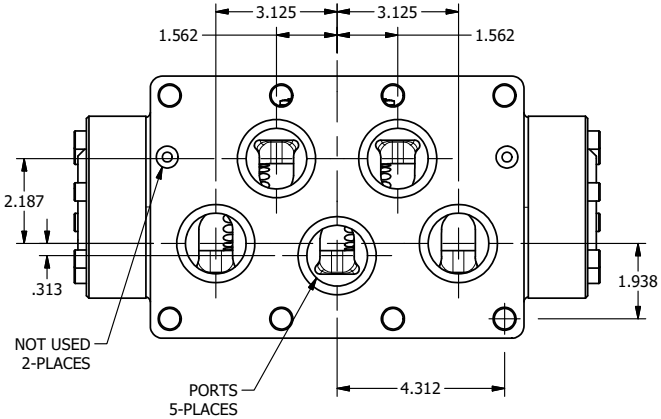

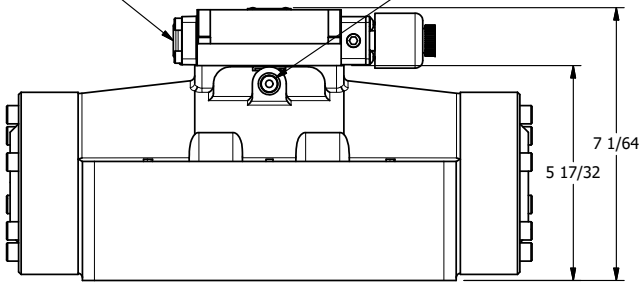

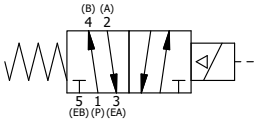

AAA PRODUCTS INTERNATIONAL
7114 Harry Hines Blvd
Dallas, TX 75235

TITLE: 2" SUBPLATE, SNGL SOL, 2 POS, SPR RTRN, EXPL PROOF, LCKN OVRD, DUST EXCLDR, EXT PILOT

DRAWING NO.: DIM_ESO16PXOLZ

THE INFORMATION CONTAINED WITHIN THIS DOCUMENT IS PROPRIETARY TO AAA PRODUCTS AND MAY NOT BE DISCLOSED WITHOUT PRIOR WRITTEN CONSENT