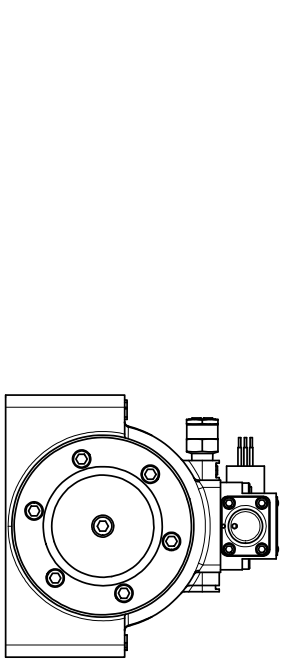

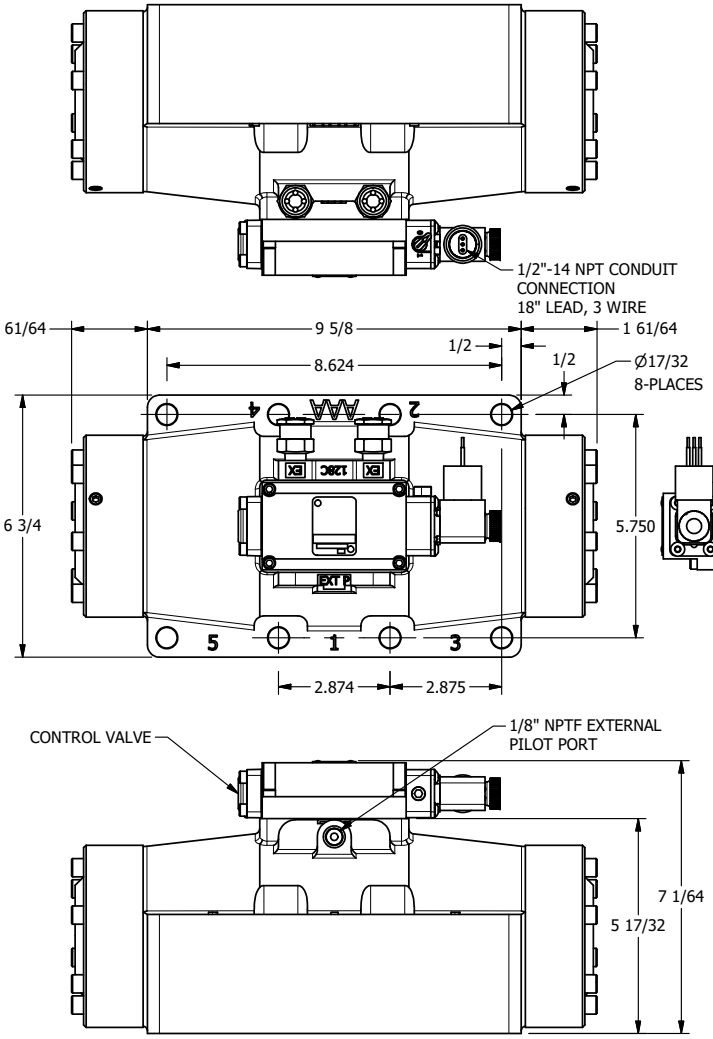

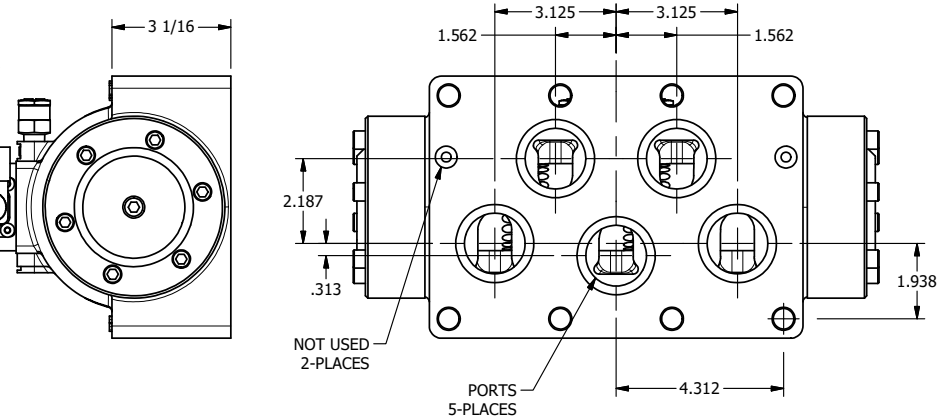

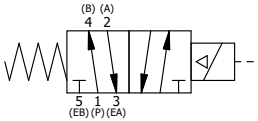

AAA PRODUCTS INTERNATIONAL 7114 Harry Hines Blvd Dallas, TX 75235	TITLE: 2" SUBPLATE, SNGL SOL, 2 POS, SPR RTRN, MOLD-OVER, LCKN OVRD, DUST EXCLDR, EXT PILOT	DRAWING NO.: DIM_ESO16PJOLZ

THE INFORMATION CONTAINED WITHIN THIS DOCUMENT IS PROPRIETARY TO AAA PRODUCTS AND MAY NOT BE DISCLOSED WITHOUT PRIOR WRITTEN CONSENT