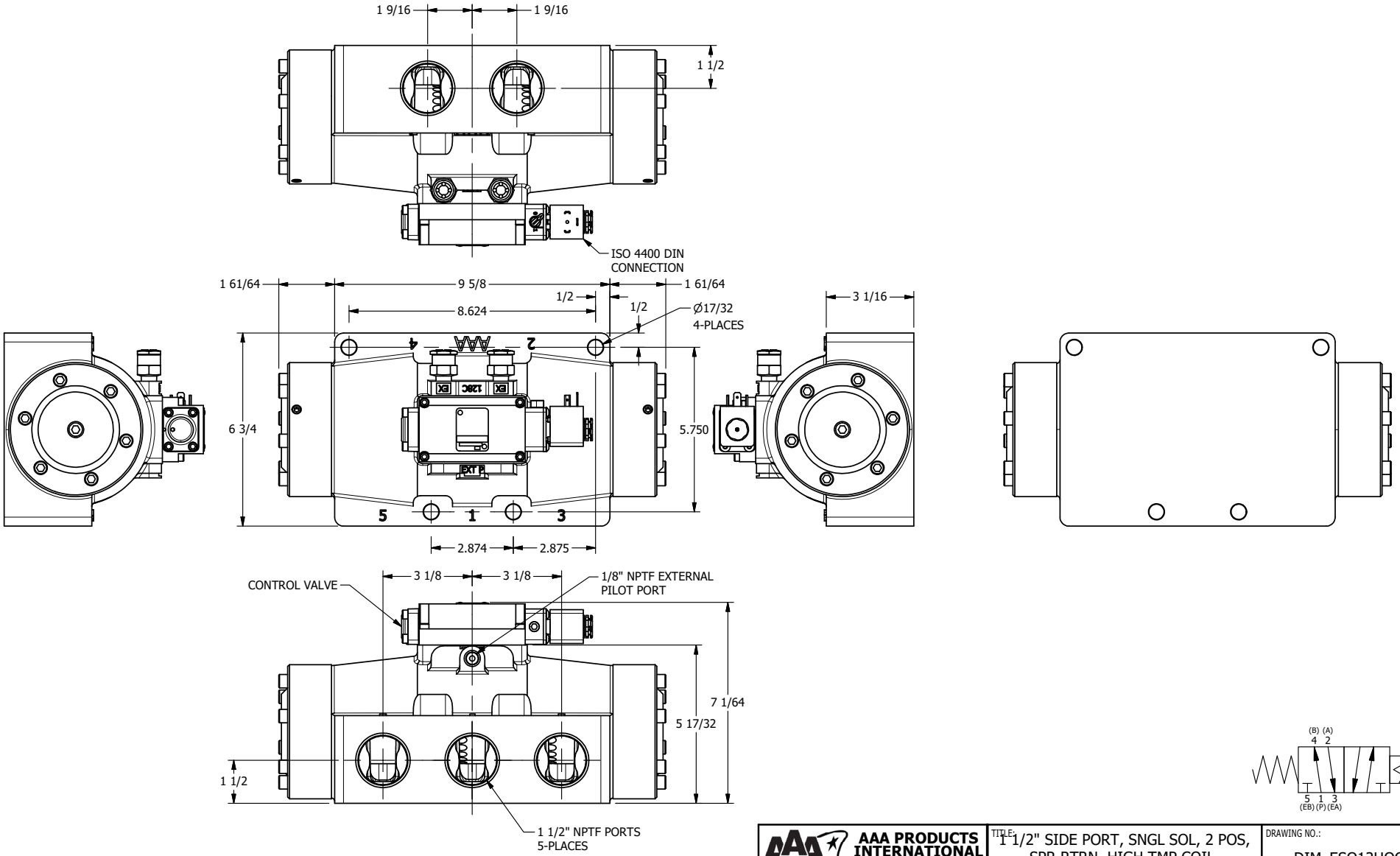


| | | |
|---|---|---|
| **AAA PRODUCTS INTERNATIONAL**<br>7114 Harry Hines Blvd<br>Dallas, TX 75235 | TITLE:<br>1 1/2" SIDE PORT, SNGL SOL, 2 POS, SPR RTRN, HIGH TMP COIL, LCKN OVRD, SIDE VENT, EXT PILOT | DRAWING NO.:<br>DIM_ESO12HOCZ |

THE INFORMATION CONTAINED WITHIN THIS DOCUMENT IS PROPRIETARY TO AAA PRODUCTS AND MAY NOT BE DISCLOSED WITHOUT PRIOR WRITTEN CONSENT