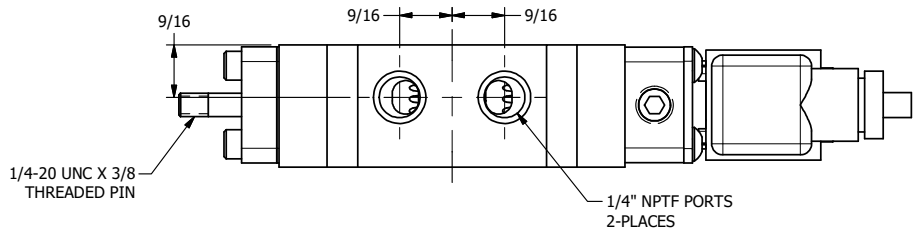

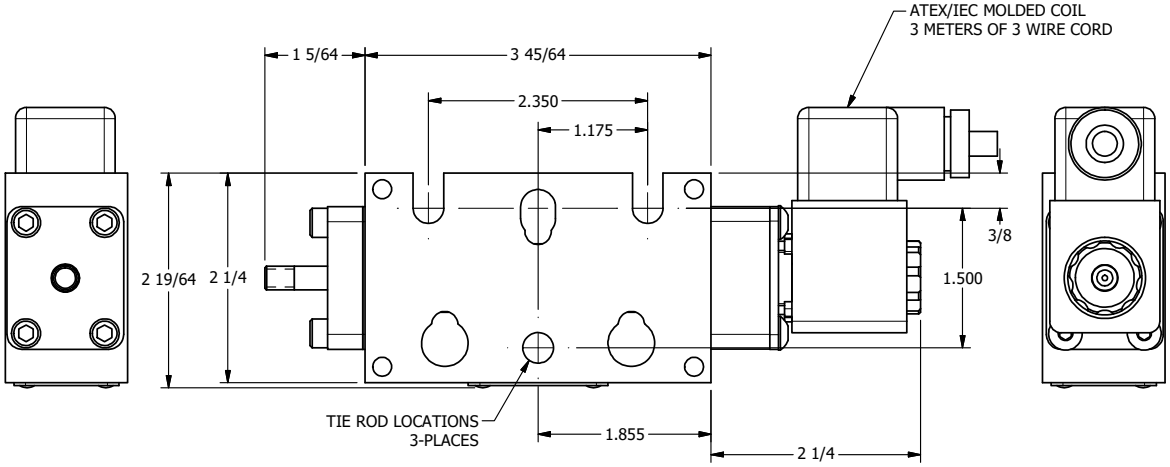

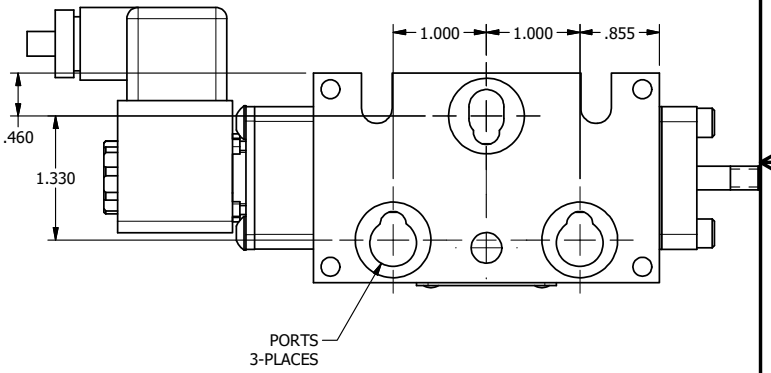

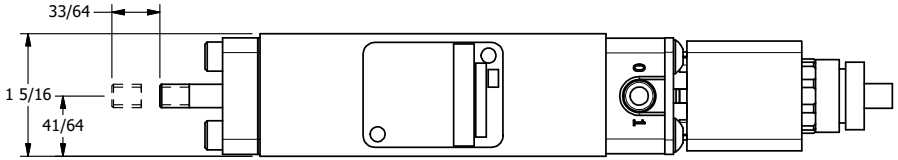

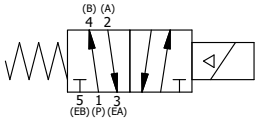

AAA PRODUCTS INTERNATIONAL 7114 Harry Hines Blvd Dallas, TX 75235	TITLE: 1/4" STACK, SNGL SOL, 2 POS, SPRING RTRN, ATEX, THREADED INDICATOR PIN	DRAWING NO.: DIM_EBSO2TK

THE INFORMATION CONTAINED WITHIN THIS DOCUMENT IS PROPRIETARY TO AAA PRODUCTS AND MAY NOT BE DISCLOSED WITHOUT PRIOR WRITTEN CONSENT