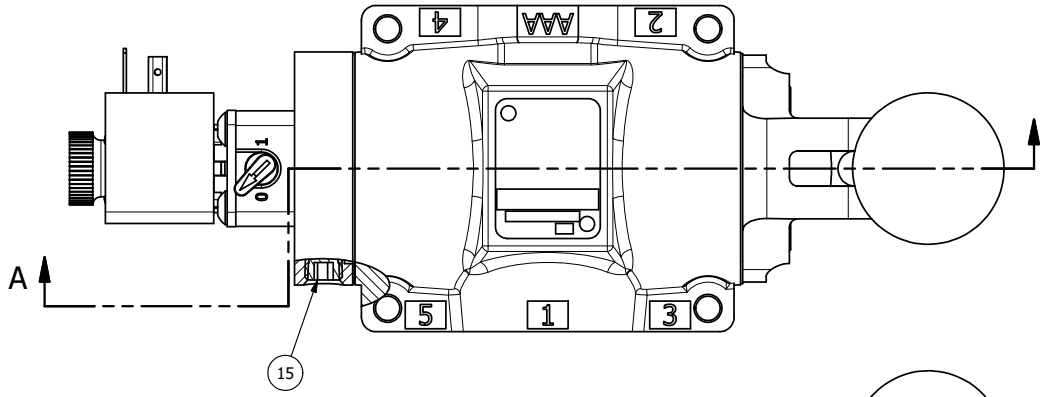

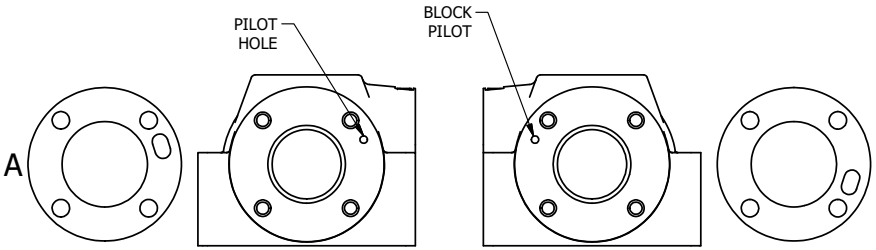

ALIGN PILOT AND HOLE IN GASKET SIDES 'B' ONLY FOR EXTERNAL PILOT OPERATION - ROTATE THE ROUND ALUMINUM ADAPTOR 180 DEGREES. REMOVE 1/8" NPTF PLUG AND SUPPLY 50-150 PSI TO 1/8" NPTF PILOT PORT IN ADAPTOR.

POSITION GASKET ON END OF VALVE SO GASKET COVERS PILOT HOLE SIDE 'A' ONLY

NOTES:
1) ALWAYS GIVE VALVE MODEL AND PART NUMBER WHEN ORDERING PARTS.

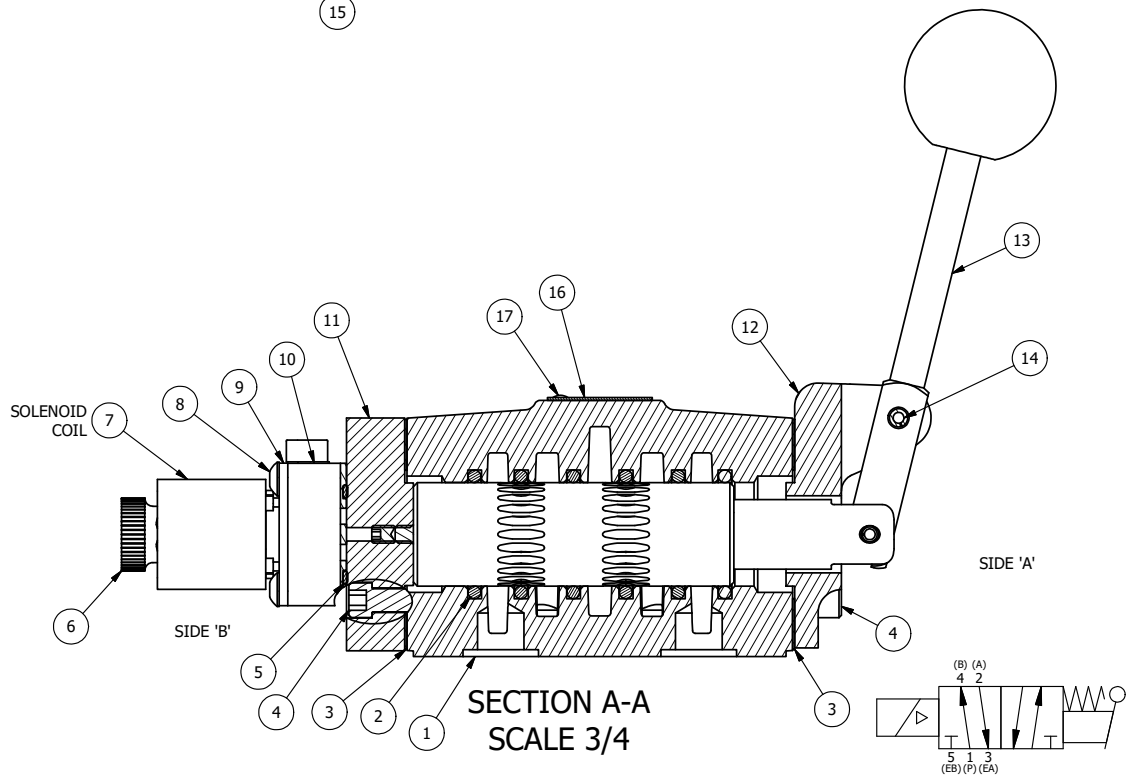

FLG	QTY	PART NO	DESCRIPTION
18	1	SPK-4	KIT - SUBPLATE MOUNT, 1/2" SUBPLATE VALVES
17	2	V-212	SCREW, #2 X 3/16 DRIVE, TYPE U, OVAL HEAD, STAINLESS STEEL
16	1	AN-114	NAMEPLATE, BLANK, FOR VALVES WITH SPRINGS OR DETENTS
15	1	V-19	PLUG, SOCKET PIPE 1/8" NPT, 7/8 TAPER, FLUSH SEAL
14	1	V-10	PIN, ROLL 3/16 X 7/8, STEEL
13	1	HL4-9	HAND LEVER ASSEMBLY, 1/2" VALVE
12	1	FE4-1	END CAP - HAND & FOOT, 380 AL, 1/2" VALVE
11	1	AY-ESAH4	ASSY - NO DETENT, RTRN TO POS A, END MNT SOL W/LEVER ASSIST, 1/2" VALVES
10	1	V-599-1	SOL OPER, END MOUNT, LOCKING O'RIDE
9	1	SEC3-7	PLATE, RE-INFORCEMENT, SOLENOID, STAMPED, 304 STAINLESS
8	4	V-584	SCREW, 10-24 X 1, BUTTON HEAD SOCKET CAP WITH MICROSPHERE APPLIED TO THREADS.
7	1	V-603-1	COIL HI-TEMP. 8-30T 120/60. NASS # 0558 55.1-00/7121.
6	1	V-567W	E SERIES SINTERED BRONZE MUFFLER, DUST EXCLUDER, V-613 LOCK WASHER
5	1	EMG3	GASKET - END MOUNT SOLENOID, BUNA-N, 1/4" & 3/8" VALVES
4	8	V-46	SCREW, 1/4-20 X 3/4, SOCKET HEAD CAP
3	2	ECG48	GASKET - END CAP, 1/2", 3/4" & 1" VALVE
2	6	V-6	O-RING, BUNA-N, 70 DURO, AS-216, (REF 1-1/8 X 1-3/8 X 1/8), 1/2" VALVES, 1" SUBPLATE
1	1	BP4-1	BODY, 1/2" SUBPLATE, UPPER PILOTS, ANODIZED

COIL VOLTAGES	
PART NO	REPLACE COIL
ESAH4PHOL 12VDC	V-603-2

LIMITS ON DIMENSIONS UNLESS OTHERWISE SPECIFIED
2-PL DECIMAL ± .01
3-PL DECIMAL ± .005
FRACTIONAL ± 1/64
ANGULAR ± 1/2'

AAA PRODUCTS INTERNATIONAL
7114 Harry Hines Blvd
Dallas, TX 75235

DRAWN: RMcKenna DATE: 4/19/2021
CHECKED: KWaite DATE: 4/19/2021
SCALE: 3/4 SHEET: 1 OF 1
RELEASED: HWomack DATE: 4/19/2021

TITLE: 1/2" SUBPLATE, SNGL SOL, 2 POS, SPR RTRN, H-TMP COIL, 120/60, LEVER ASST, EXCLDR, SIDE VENT

PART NO.: ESAH4PHOL

REV.:

D:\Engineering\Product\Valves\Assembly\Standard\ESAH\DWG\ESAH4PHOL.dw

THE INFORMATION CONTAINED WITHIN THIS DOCUMENT IS PROPRIETARY TO AAA PRODUCTS AND MAY NOT BE DISCLOSED WITHOUT PRIOR WRITTEN CONSENT