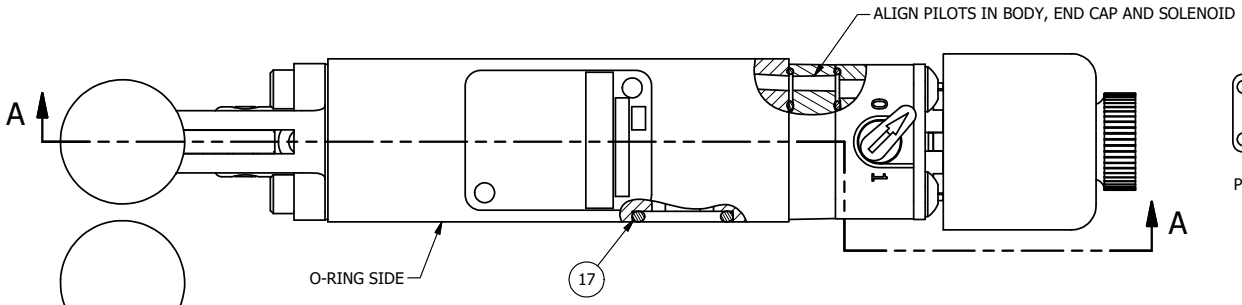

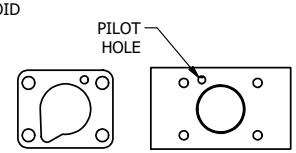

POSITION GASKET ON END OF VALVE TO SEAL PILOT HOLE, SIDE 'B' ONLY

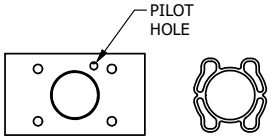

ALIGN PILOT AND SLOT IN ADAPTOR WITH GASKET IN BETWEEN SIDE 'A' ONLY FOR EXTERNAL PILOT OPERATION - ROTATE ADAPTOR 180 DEGREES. REMOVE 1/8" NPTF PLUG AND SUPPLY 50-150 PSI TO 1/8" NPTF PILOT PORT IN ADAPTOR.

NOTES:
1) ALWAYS GIVE VALVE MODEL AND PART NUMBER WHEN ORDERING PARTS.

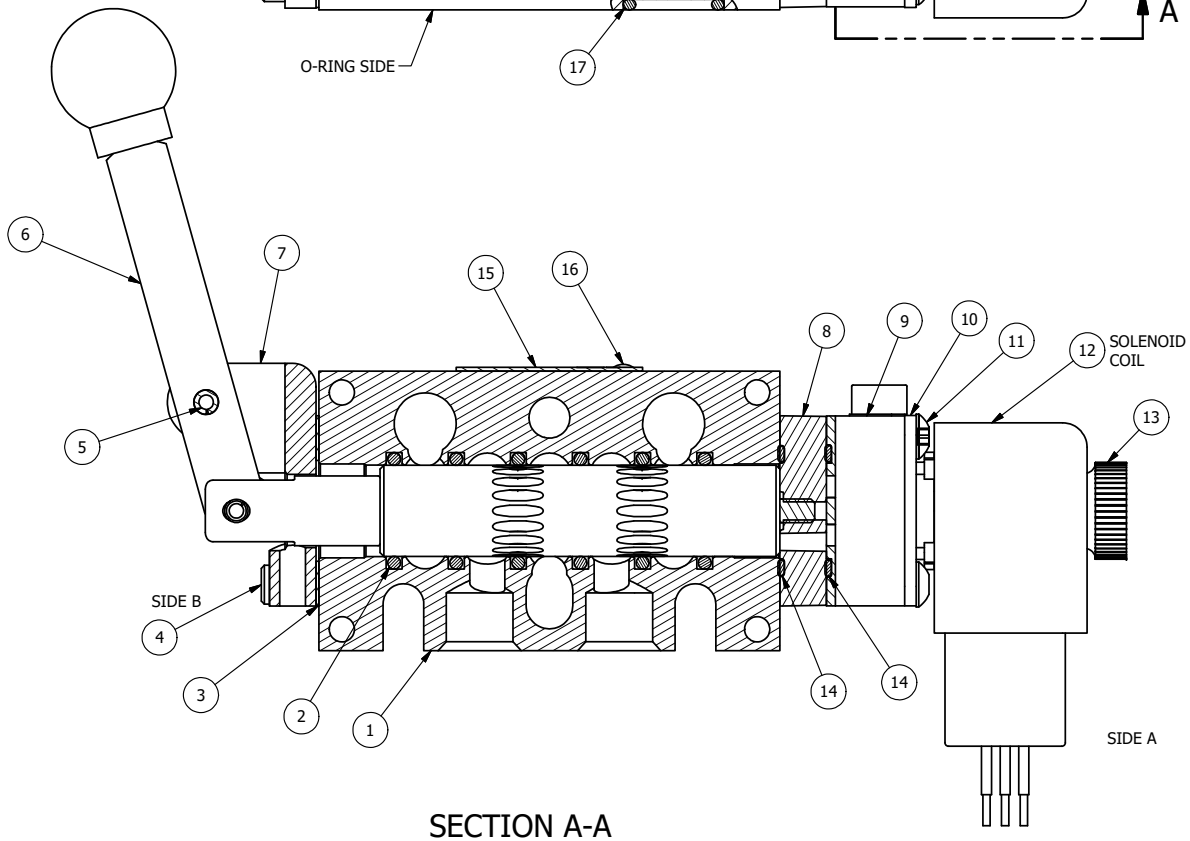

SECTION A-A
SCALE 1 : 1

FLG	QTY	PART NO	DESCRIPTION
17	3	V-110	O-RING, BUNA-N, 70 DURO, AS-114, (REF 5/8 X 13/16 X 3/32), 1/4" SLEEVE, 1/2" SUB, STACK
16	2	V-212	SCREW, #2 X 3/16 DRIVE, TYPE U, OVAL HEAD, STAINLESS STEEL
15	1	AN-114	NAMEPLATE, BLANK, FOR VALVES WITH SPRINGS OR DETENTS
14	2	EMG3	GASKET - END MOUNT SOLENOID, BUNA-N, 1/4" & 3/8" VALVES
13	1	V-567W	E SERIES SINTERED BRONZE MUFFLER, DUST EXCLUDER, V-613 LOCK WASHER
12	1	V-593-1	COIL - 120VAC EXP PROOF, 1/2" NPTF STAINLESS CONNECTION, NASS #0568 05.1-00/6874
11	4	V-601	SCREW, 10-24 X 1-1/2, BUTTON HEAD SOCKET CAP WITH MICROSPHERE ADHESIVE
10	1	SEC3-7	PLATE, RE-INFORCEMENT, SOLENOID, STAMPED, 304 STAINLESS
9	1	V-599-1	SOL OPER, END MOUNT, LOCKING O'RIDE
8	1	AY-ESAH3	ASSY - NO DETENT, RTRN TO POS C, END MNT SOL W/HANDLE OVRD, 1/4" & 3/8" VALVES
7	1	HE3-4	ENDCAP - HAND OPERATOR, 303 STAINLESS, 1/4" & 3/8" STACK VALVE
6	1	HL3-24	HAND LEVER WITH KNOB, 1/4" & 3/8" VALVE
5	1	V-542	PIN, ROLL 3/16 X 1/2 ZINC PLATED STEEL FOR HE3-4 END CAP
4	4	V-162	SCREW, 10-24 X 5/8, SOCKET HEAD CAP
3	1	ECG3	GASKET - END CAP, 1/4" & 3/8" VALVE
2	6	V-39	O-RING, VITON, STD BODY, 1/4" & 3/8" VALVES
1	1	B3-10E	FINISHED - SOLID BODY, UPPER PILOTS, 3/8" STACKING VALVE

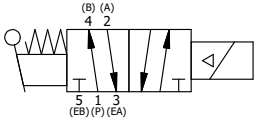

COIL VOLTAGES	
PART NO	REPLACE COIL
EBSAH3XOL 12VDC	V-593-2
EBSAH3XOL 24VDC	V-593-3
EBSAH3XOL 240/60	V-593-4

LIMITS ON DIMENSIONS UNLESS OTHERWISE SPECIFIED
2-PL DECIMAL ± .01
3-PL DECIMAL ± .005
FRACTIONAL ± 1/64
ANGULAR ± 1/2'

AAA PRODUCTS INTERNATIONAL
7114 Harry Hines Blvd
Dallas, TX 75235

DRAWN: RMcKenna	DATE: 4/19/2021	CHECKED: KWaite	DATE: 4/19/2021
SCALE: 1 : 1	SHEET: 1 OF 1	RELEASED: HWomack	DATE: 4/19/2021

TITLE: 3/8" STACK, SNGL SOL, 2 POS, SPR RTRN, EXPL PROOF, 120/60, LEVER ASST, EXCLDR, SIDE VENT

PART NO.: EBSAH3XOL

REV.:

THE INFORMATION CONTAINED WITHIN THIS DOCUMENT IS PROPRIETARY TO AAA PRODUCTS AND MAY NOT BE DISCLOSED WITHOUT PRIOR WRITTEN CONSENT

D:\Engineering\Product\Valves\Assembly\Standard\ESAH\DWG\EBSAH3XOL.dw