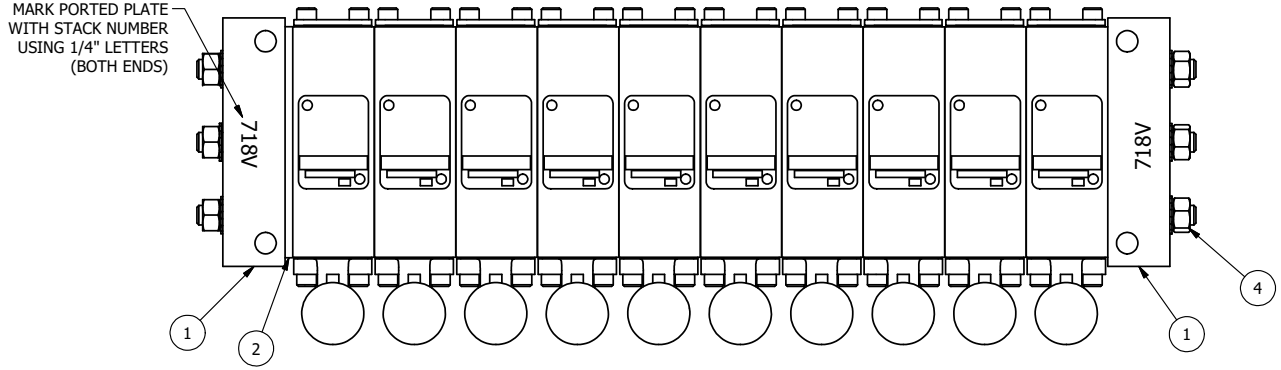

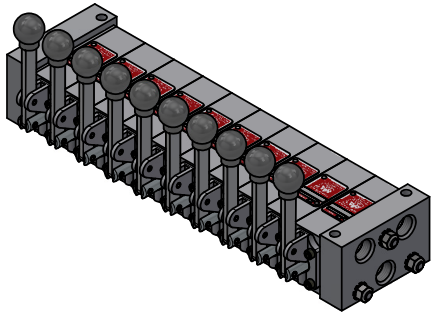

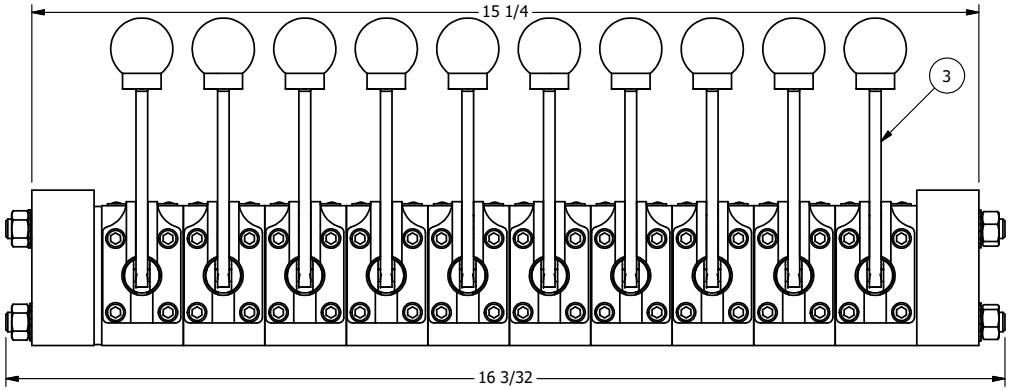

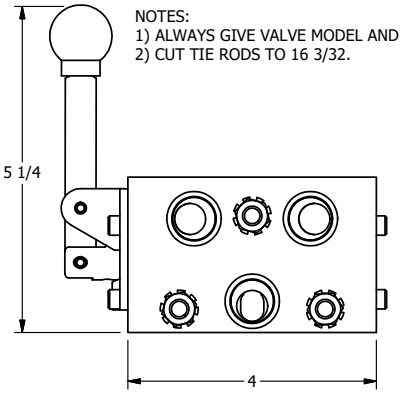

NOTES:
1) ALWAYS GIVE VALVE MODEL AND PART NUMBER WHEN ORDERING PARTS.
2) CUT TIE RODS TO 16 3/32.

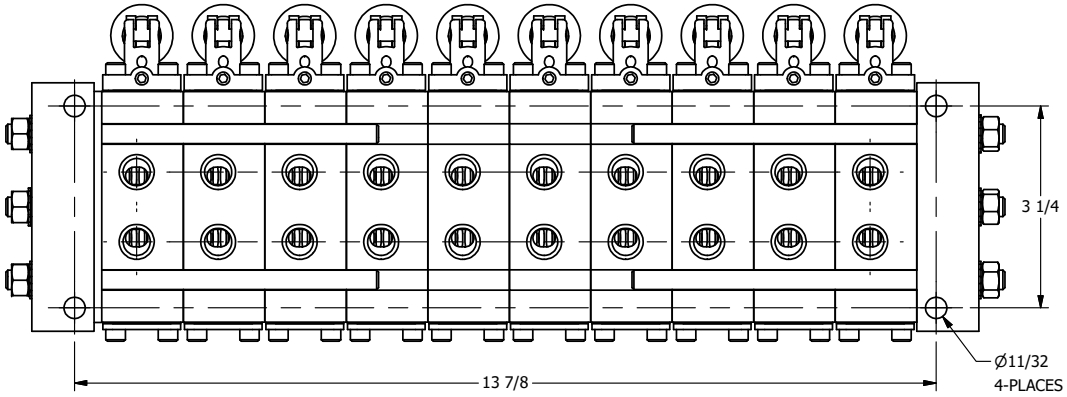

FLG	QTY	PART NO	DESCRIPTION
4	1	TRK-18	TIE ROD KIT - 18" LONG WITH HARDWARE, (CUT TO LENGTH), B-SERIES STACK VALVE
3	10	BHD2	1/4" STACK, LEVER, 3 POS, DETENT, CLSD CTR SPOOL
2	1	BOS-4	SPACER - O-RING DIVIDER, 1/4" & 3/8" STACKING VALVE
1	2	PEP-4	PLATE, PORTED END, 1/2" NPTF, 1/4" & 3/8" STACK VALVE

LIMITS ON DIMENSIONS UNLESS OTHERWISE SPECIFIED
2-PL DECIMAL ± .01
3-PL DECIMAL ± .005
FRACTIONAL ± 1/64
ANGULAR ± 1/2'

AAA PRODUCTS INTERNATIONAL
7114 Harry Hines Blvd
Dallas, TX 75235

DRAWN: RMcKenna DATE: 11/8/2013
CHECKED: KWaite DATE: 11/12/2013
SCALE: None SHEET: 1 OF 1
RELEASED: HWomack DATE: 11/12/2013

TITLE: ASSEMBLY, BHD2 X10 STACK, PORTED BOTH ENDS, 1/4" B-SERIES STACK

PART NO.: 718V

REV.:

THE INFORMATION CONTAINED WITHIN THIS DOCUMENT IS PROPRIETARY TO AAA PRODUCTS AND MAY NOT BE DISCLOSED WITHOUT PRIOR WRITTEN CONSENT

D:\Engineering\Product\Valves\Assembly\Stack\DWG\718V.dwg