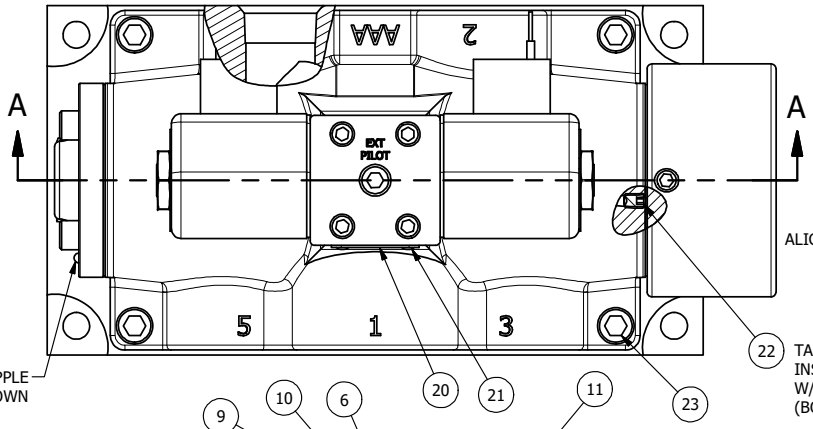

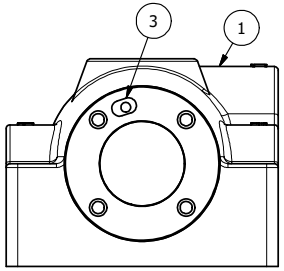

ALIGN PILOT AND HOLE IN GASKET AS SHOWN. SIDE 'B' ONLY, BLOCK OTHER PILOT.

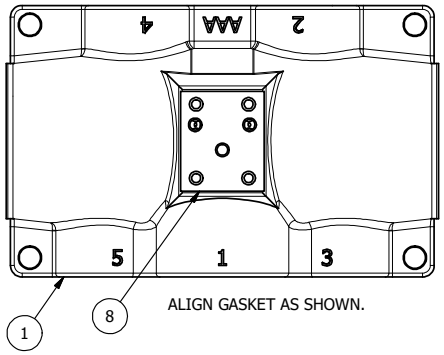

ALIGN GASKET AS SHOWN.

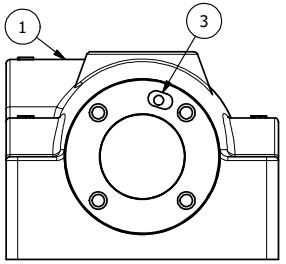

ALIGN PILOT AND HOLE IN GASKET AS SHOWN. SIDE 'A' ONLY, BLOCK OTHER PILOT.

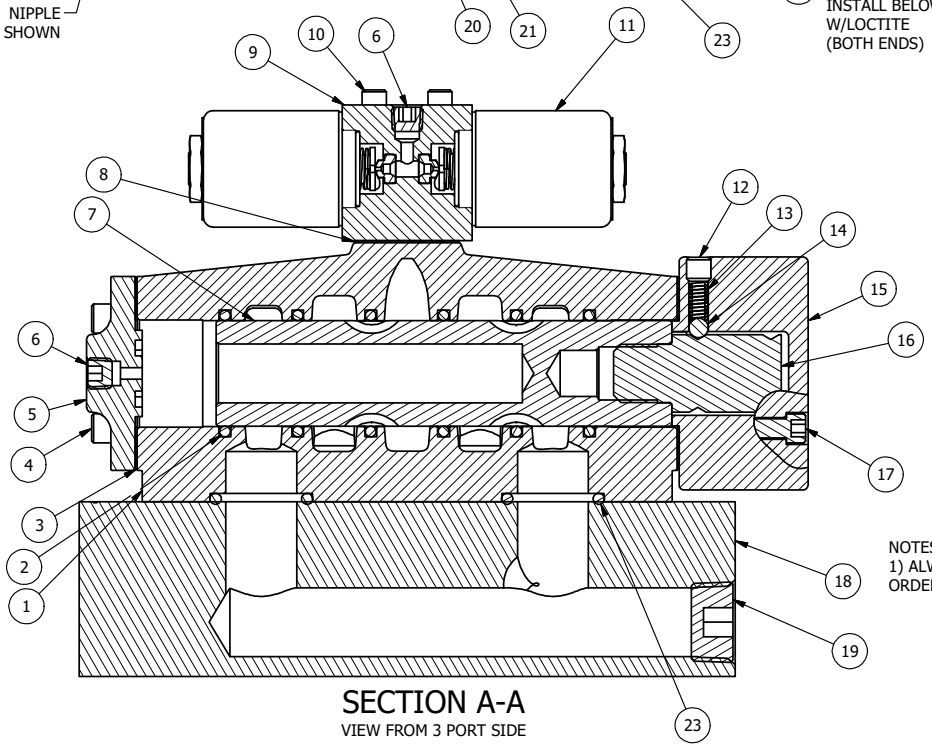

SECTION A-A

VIEW FROM 3 PORT SIDE

NOTES:
1) ALWAYS GIVE VALVE MODEL AND PART NUMBER WHEN ORDERING PARTS.

FLG	QTY	PART NO	DESCRIPTION
23	1	SPK-8	KIT - SUBPLATE MOUNT, 1" SUBPLATE VALVES
22	2	V-31	SCREW, 10-24 X 1/4, SOCKET SET
21	2	V-212	SCREW, 2 X 3/16, DRIVE, TYPE U, OVAL HEAD, 316 SS
20	1	AN-114	NAME PLATE, BLANK, FOR VALVES WITH SPRINGS OR DETENTS.
19	1	V-552	PLUG, 3/4" NPT FLUSH SEAL
18	1	SP6-4N	SUBPLATE - 3/4" SIDE PORT, SINGLE EXHAUST, NO PILOT, 1" SUBPLATE VALVE
17	4	V-28	SCREW, 1/4-20 X 2, SOCKET HEAD CAP
16	1	SC8-369V	CLEVIS - POS. A & C DETENTS, REMOVED EARS, 3/4" & 1" VALVES
15	1	PEC8-369V	END CAP, DETENT, SOLENOID, 6061-T6 AL, 3/4" & 1" VALVE
14	1	V-4	BALL, CHROME STEEL 1/4 DIA. FOR DETENT
13	1	DS48	SPRING - DETENT, 1/2", 3/4" & 1" VALVE
12	1	V-8	SCREW, 5/16-18 X 5/16, SOCKET SET, CUP POINT
11	2	AY-38-11	CLASSIC SOLENOID - STANDARD, COMPLETE OPERATOR, 120/60
10	4	V-1	SCREW, 10-24 X 2, SOCKET HEAD CAP
9	1	PB3-2E	ADAPTOR - DOUBLE SOLENOID, 1/4" & 3/8" VALVES
8	1	PBG3	GASKET - PIGGY BACK, DOUBLE SOLENOID, 1/4" & 3/8" VALVE
7	1	S8	SPOOL - STANDARD, 2 POS, CLSD CTR, 3/4" & 1" VALVE
6	2	V-19	PLUG, SOCKET PIPE 1/8" NPT (#601-3 PITTSBURG PLUG PART #.)
5	1	DP48	ENDCAP - DP48, DIFFERENTIAL PILOT, 380 AL, 1/2", 3/4" & 1" VALVES
4	4	V-46	SCREW, 1/4-20 X 3/4, SOCKET HEAD CAP
3	2	ECG48	GASKET - END CAP, 1/2", 3/4" & 1" VALVE
2	6	V-30	O-RING, BUNA-N, 70 DURO, AS-220, (REF 1-3/8 X 1-5/8 X 1/8), 3/4" & 1" VALVES
1	1	BP8-369V	BODY, 1" SUBPLATE, CUST UPPER PILOT & PIGGY BACK, STD PILOT PLUGGED

LIMITS ON DIMENSIONS UNLESS OTHERWISE SPECIFIED: 2-PL DECIMAL ± .01, 3-PL DECIMAL ± .005, FRACTIONAL ± 1/64, ANGULAR ± 1/2°

AAA PRODUCTS INTERNATIONAL
7114 Harry Hines Blvd
Dallas, TX 75235

DRAWN: RHuffstetter DATE: 2/3/2000 | CHECKED: KWaite DATE: 2/17/2017
SCALE: None SHEET: 1 OF 1 | RELEASED: HWomack DATE: 2/17/2017

TITLE: ASSY - SS8PQ, SP6-4N SUBPLATE, 1" SUBPLATE VALVE

PART NO.: 374V

REV.:

THE INFORMATION CONTAINED WITHIN THIS DOCUMENT IS PROPRIETARY TO AAA PRODUCTS AND MAY NOT BE DISCLOSED WITHOUT PRIOR WRITTEN CONSENT

D:\Engineering\Inventor Files\Internal Drawings\Valves\Assembly\Classic\Special\374V.idw