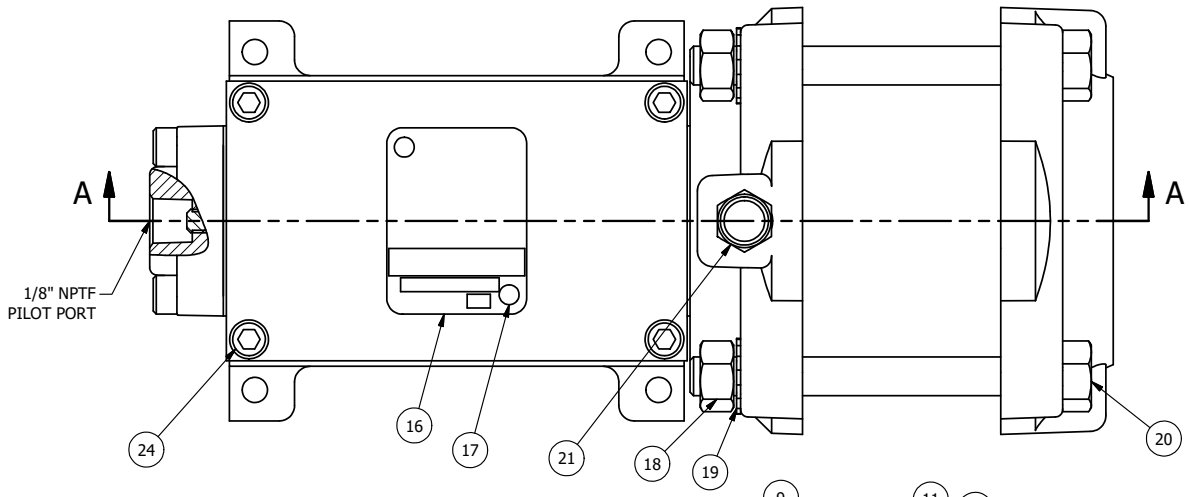

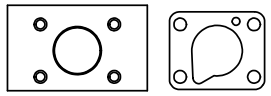

POSITION GASKET ON END OF VALVE SO
MOUNTING HOLES ALIGN,
BOTH ENDS (SIDE 'A' SHOWN)

NOTES:
1) ALWAYS GIVE VALVE MODEL AND PART NUMBER WHEN ORDERING PARTS.
2) MINIMUM SHIFT PRESSURE OF 12 PSI ON PISTON PILOT PORTS.

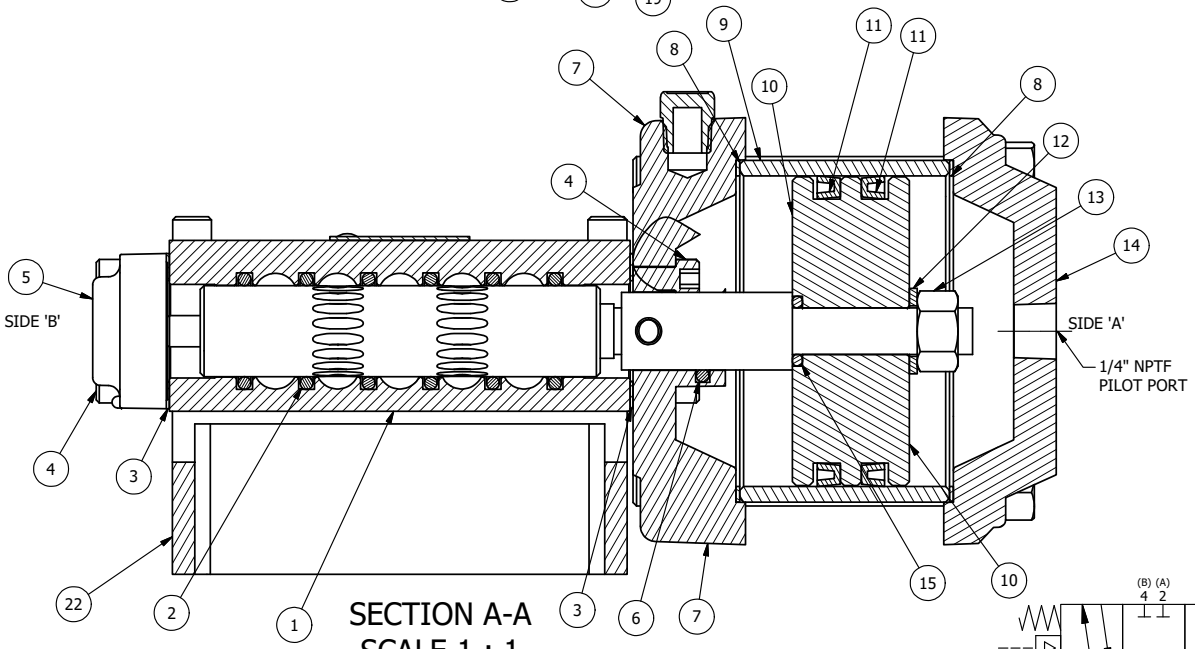

SECTION A-A
SCALE 1 : 1
VIEW FROM 3 PORT SIDE

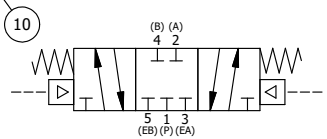

FLG	QTY	PART NO	DESCRIPTION
24	4	V-614	SCREW, 10-24 X 1-3/4", SOCKET HEAD CAP
22	1	MP2-D	SPACER, MOUNTING, 1-5/16 HIGH, 1/4" & 3/8" VALVES
21	1	BV-1	BREATHER VENT, FLAT, 1/8-27 NPTF
20	4	V-242	SCREW, 5/16-18 X 3, HEX HEAD, PLATED
19	4	V-104-SS	STAR WASHER 5/16" STAINLESS STEEL.
18	4	V-105-SS	NUT, 5/16-18, HEX, STAINLESS STEEL
17	2	V-212	SCREW, #2 X 3/16 DRIVE, TYPE U, OVAL HEAD, STAINLESS STEEL
16	1	AN-114	NAMEPLATE, BLANK, FOR VALVES WITH SPRINGS OR DETENTS
15	1	V-89	O-RING, BUNA-N, 70 DURO, AS-110, (REF 3/8 X 9/16 X 3/32), 1" & 2" SUBPLATE PILOT
14	1	PBEC3	PISTON - ENCAP, BLIND, 1/4" & 3/8" VALVE
13	1	V-227	NUT, 3/8-16, HEX, PLATED
12	1	V-270	WASHER FLAT 3/8" CADIUM PLATED FOR ALL PISTON OPERATORS
11	2	V-115	U-CUP, 2-1/2 X 2-1/8 X 3/16, NITRILE
10	1	YP3-A	2 1/2" PISTON - 2 POS., 1/4" & 3/8" VALVE
9	1	BRY3-1	BARREL, SPR CTR, 1/4" & 3/8" PISTON VALVE
8	2	V-165	GASKET - PISTON BARREL, 1/4" & 3/8" VALVE
7	1	PRCY3	PISTON - 3 POS., ROD END, 1/4" & 3/8" VALVE
6	1	V-110	O-RING, BUNA-N, 70 DURO, AS-114, (REF 5/8 X 13/16 X 3/32), 1/4" SLEEVE, 1/2" SUB, STACK
5	1	AY-PYR3	ASSY - SPR CTR, CLSD CTR SPL, PISTON, PILOT RTRN ASSIST, 1/4 & 3/8 VALVES
4	8	V-38	SCREW, 10-24 X 3/4, SOCKET HEAD CAP
3	2	ECG3	GASKET - END CAP, 1/4" & 3/8" VALVE
2	6	V-39	O-RING, VITON, STD BODY, 1/4" & 3/8" VALVES
1	1	B2-2E	BODY - SOLID, PLAIN, NO PILOTS, ANODIZED, 1/4" SIDE PORT VALVE

LIMITS ON DIMENSIONS UNLESS OTHERWISE SPECIFIED
2-PL DECIMAL ± .01
3-PL DECIMAL ± .005
FRACTIONAL ± 1/64
ANGULAR ± 1/2'

AAA PRODUCTS INTERNATIONAL
7114 Harry Hines Blvd
Dallas, TX 75235

DRAWN: RMcKenna DATE: 5/15/1995
CHECKED: KWaite DATE: 10/19/2016
SCALE: 1 : 1 SHEET: 1 OF 1
RELEASED: HWomack DATE: 10/19/2016

TITLE: 1/4" SIDE PORT, PISTON, 3 POS, SPR CTR, PISTON SHFT, CLSD CTR SPL, REAR PILOT

PART NO.: 340VY

REV.:

THE INFORMATION CONTAINED WITHIN THIS DOCUMENT IS PROPRIETARY TO AAA PRODUCTS AND MAY NOT BE DISCLOSED WITHOUT PRIOR WRITTEN CONSENT

D:\Engineering\Product\Valves\Assembly\Piston\Special\DWG\340VY.dw