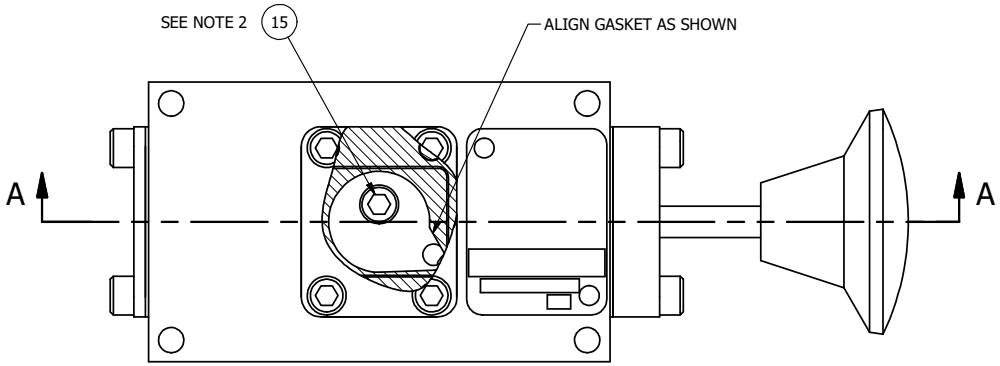

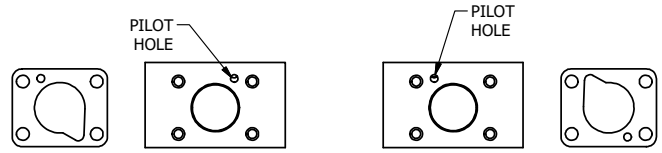

POSITION GASKET TO SEAL PILOT HOLE ON SIDE 'B' ONLY.

ALIGN PILOT HOLE AND CENTER CUTOUT SIDE 'A' ONLY.

NOTES:
1) ALWAYS GIVE VALVE MODEL AND PART NUMBER WHEN ORDERING PARTS.
2) INSTALL PLUG BELOW FLUSH.

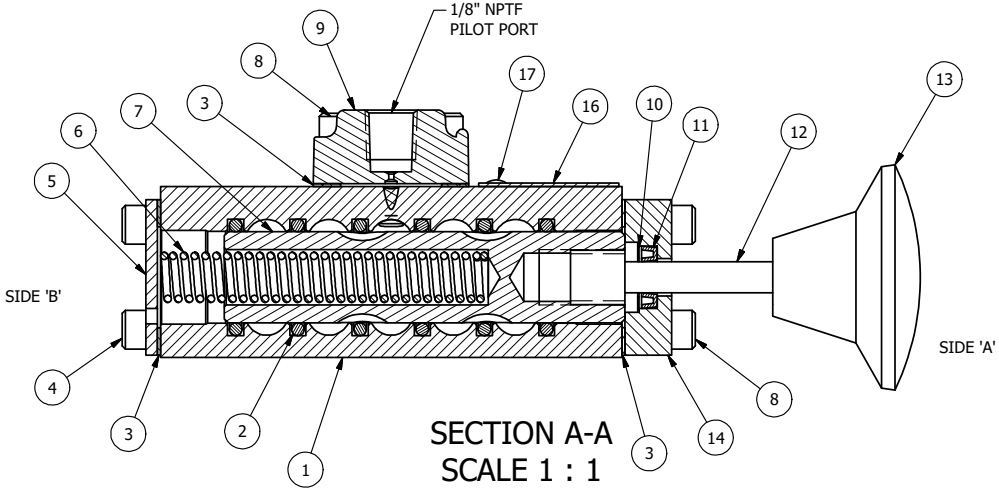

SECTION A-A
SCALE 1 : 1
VIEW FROM 3 PORT SIDE

FLG	QTY	PART NO	DESCRIPTION
17	2	V-212	SCREW, 2 X 3/16, DRIVE, TYPE U, OVAL HEAD, 316 SS
16	1	AN-114	NAME PLATE, BLANK, FOR VALVES WITH SPRINGS OR DETENTS.
15	1	V-231	PLUG, SOCKET PRESSURE 1/16-27X 7/8 TAPER FOR 122V,192V,FOR EC
14	1	PEC3-5	END CAP, INDICATOR PIN, WIPER CAVITY, 6061-T6, 1/4" & 3/8" VALVE
13	1	V-192	KNOB, RED, (BRASS 1/4-20 INSERT), 1 13/16 DIA, PUSH/PULL
12	1	PIK3	PIN, SPOOL OVERRIDE, 303 STAINLESS, 1/4" & 3/8" VALVES
11	1	V-78	U-CUP, NITRILE, 1/2 X 1/4 X 1/8
10	1	V-119	RING,CIRCULAR PUSH ON TYPE FOR INDICATOR PIN
9	1	PEC3	END CAP, PILOT, 380 AL, 1/4" & 3/8" VALVE
8	8	V-38	SCREW, 10-24 X 3/4, SOCKET HEAD CAP
7	1	S3	SPOOL - STANDARD, 2 POS, CLSD CTR, 1/4" & 3/8" VALVE
6	1	CS3	SPRING - RETURN, (EXCEPT HO, KO & PO) 1/4" & 3/8" VALVES
5	1	SEC3	END CAP, 304 STAINLESS STEEL, 1/4" & 3/8" VALVE
4	4	V-37	SCREW, 10-24 X 1/2, SOCKET HEAD CAP
3	3	ECG3	GASKET - END CAP, 1/4" & 3/8" VALVE
2	6	V-39	O-RING, STD BODY, VITON, 1/4" & 3/8" VALVES
1	1	B2-6EZ-NT	BODY - SOLID, PIGGY BACK, EXT PILOT, TOP NAMETAG HOLES, 1/4" SIDE PORT VALVES

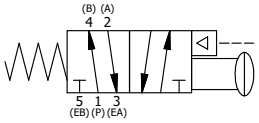

LIMITS ON DIMENSIONS UNLESS OTHERWISE SPECIFIED
2-PL DECIMAL ± .01
3-PL DECIMAL ± .005
FRACTIONAL ± 1/64
ANGULAR ± 1/2°

AAA PRODUCTS INTERNATIONAL
7114 Harry Hines Blvd
Dallas, TX 75235

DRAWN: H.J.	DATE: 2/20/2018	CHECKED: KWaite	DATE: 1/16/2017
SCALE: 1 : 1	SHEET: 1 OF 1	RELEASED: HWomack	DATE: 1/16/2017

TITLE: 1/4" SIDE PORT, SNGL PILOT, 2 POS, SPRING RTRN, KNOB OVRD

PART NO.: 227V

REV.:

THE INFORMATION CONTAINED WITHIN THIS DOCUMENT IS PROPRIETARY TO AAA PRODUCTS AND MAY NOT BE DISCLOSED WITHOUT PRIOR WRITTEN CONSENT

D:\Engineering\Inventor Files\Internal Drawings\Valves\Assembly\Pilot\Special\227V.dw