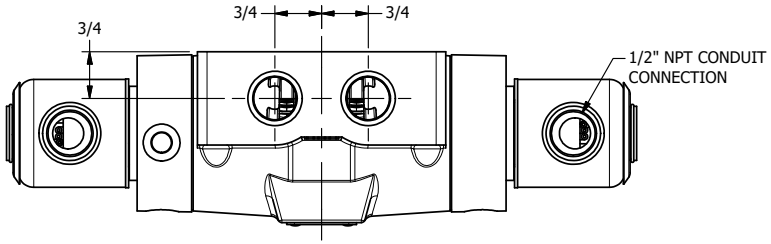

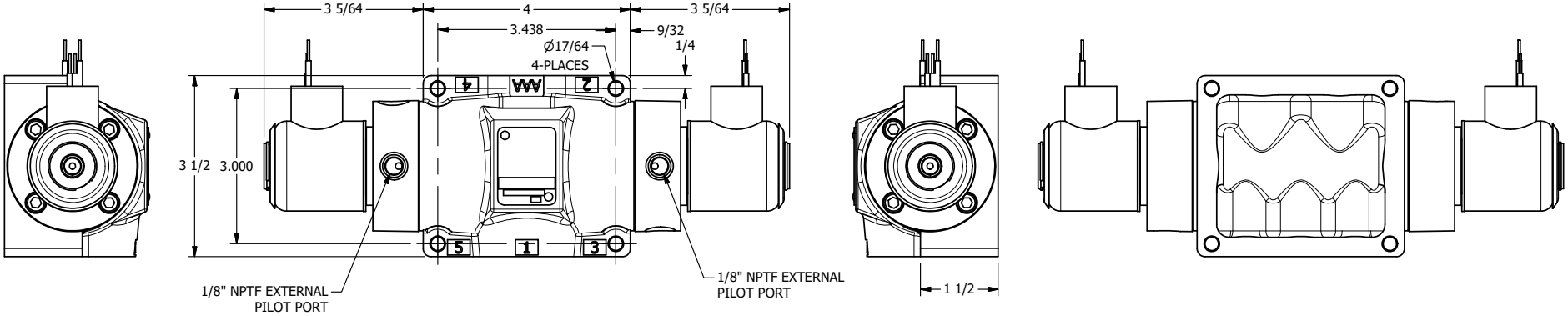

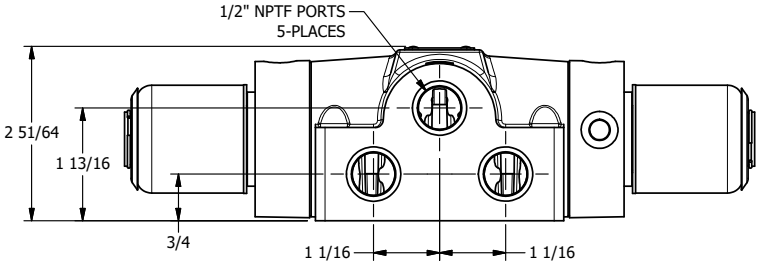

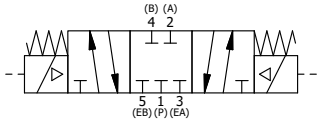

AAA PRODUCTS INTERNATIONAL 7114 Harry Hines Blvd Dallas, TX 75235	TITLE: 1/2" SIDE PORT, DBL SOL, 3 POS, SPR CTR, SOL RTRN, CLSD CTR SPL, EXPL PROOF, EXT PILOT	DRAWING NO.: DIM_813VY

THE INFORMATION CONTAINED WITHIN THIS DOCUMENT IS PROPRIETARY TO AAA PRODUCTS AND MAY NOT BE DISCLOSED WITHOUT PRIOR WRITTEN CONSENT