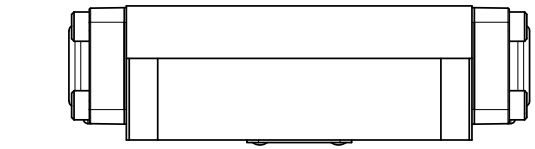

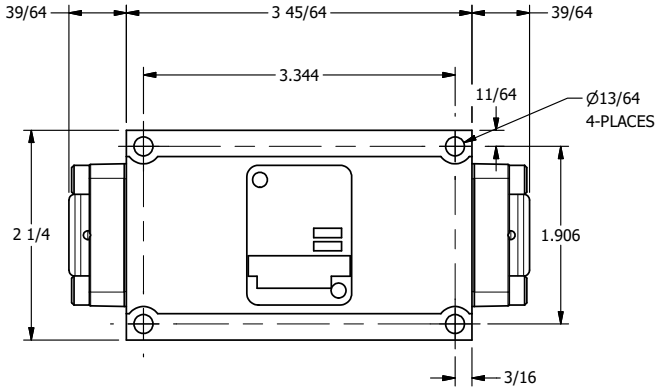

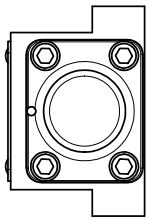

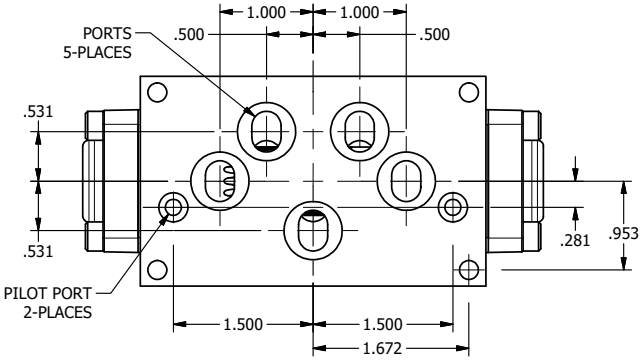

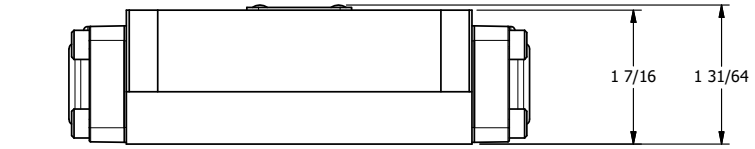

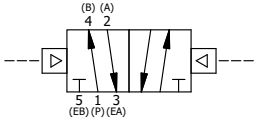

AAA PRODUCTS INTERNATIONAL
7114 Harry Hines Blvd
Dallas, TX 75235

TITLE: 3/8" SUBPLATE, DBL PILOT, 2 POS, FRICTION POS, PILOT RTRN. BOTTOM PILOTS, DOW55

DRAWING NO.: DIM_682V

THE INFORMATION CONTAINED WITHIN THIS DOCUMENT IS PROPRIETARY TO AAA PRODUCTS AND MAY NOT BE DISCLOSED WITHOUT PRIOR WRITTEN CONSENT