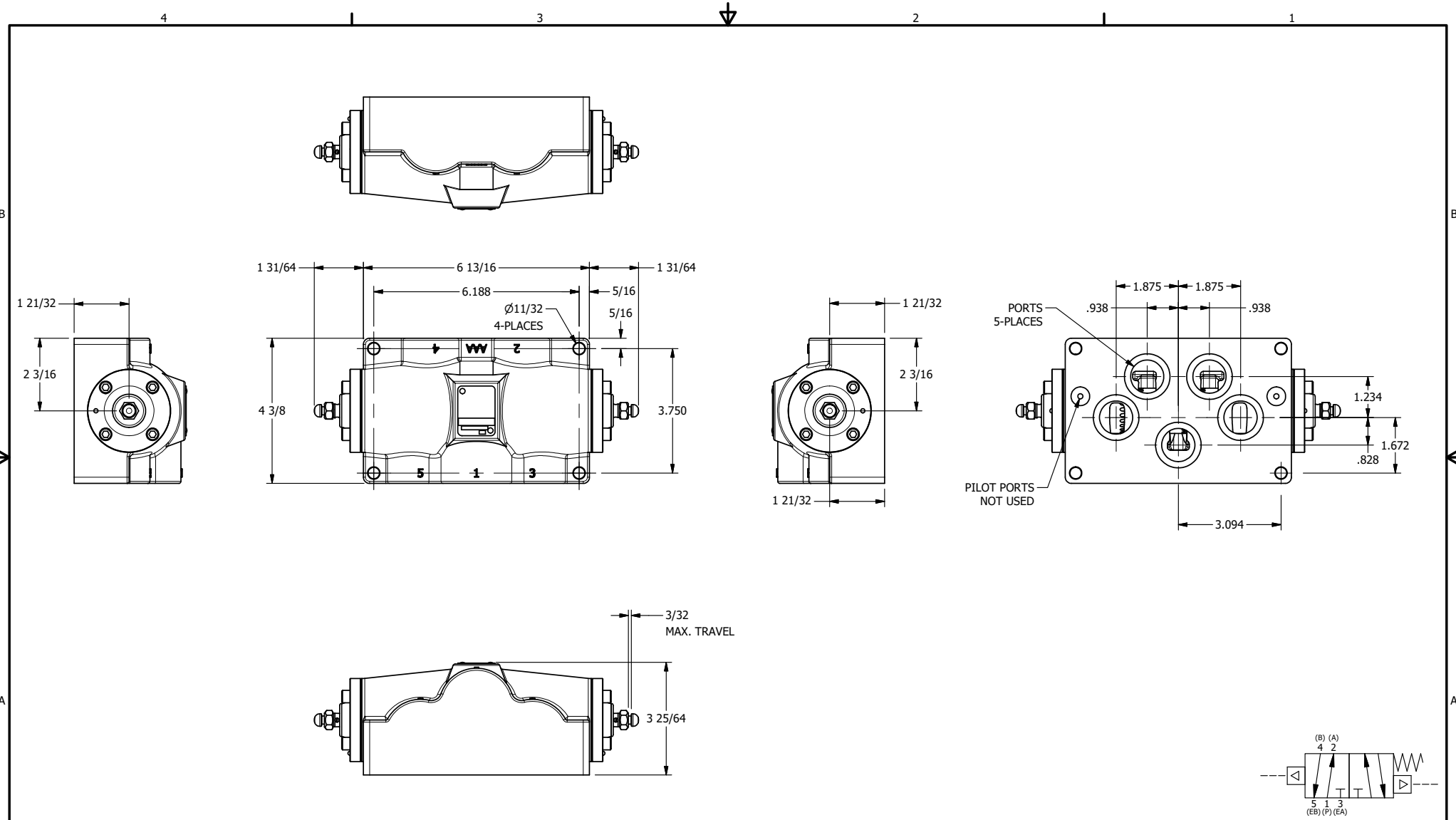

AAA PRODUCTS INTERNATIONAL
7114 Harry Hines Blvd
Dallas, TX 75235

TITLE: 1" SUBPLATE, DIFF PILOT, 2 POS, FRICTION POS, DIFF PILOT RTRN AFLAS BODY O-RINGS, SPRING ASST

DRAWING NO.: DIM_328V

THE INFORMATION CONTAINED WITHIN THIS DOCUMENT IS PROPRIETARY TO AAA PRODUCTS AND MAY NOT BE DISCLOSED WITHOUT PRIOR WRITTEN CONSENT