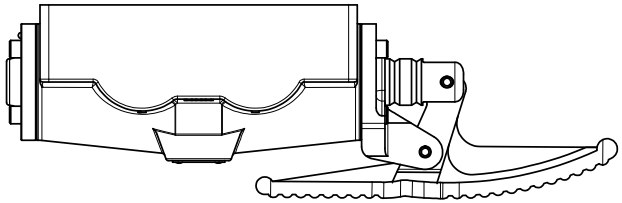

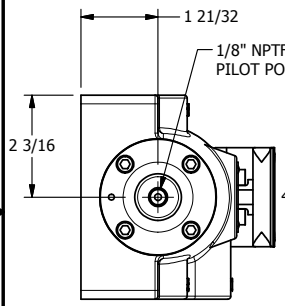

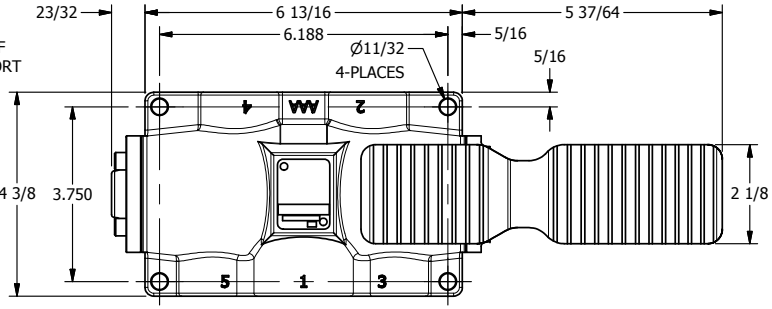

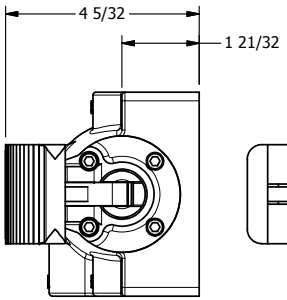

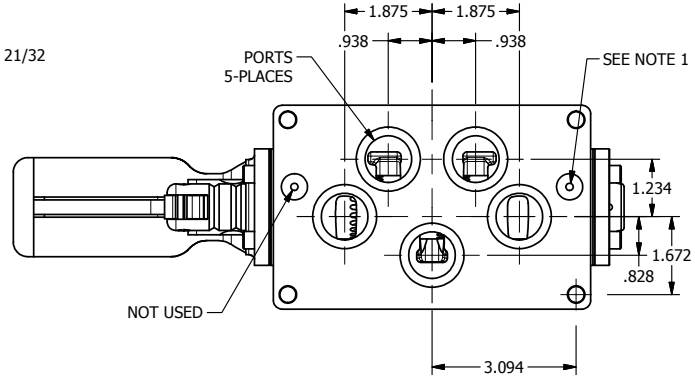

NOTES:
1) REMOTE PILOT CAN BE ROUTED THROUGH SUBPLATE CONNECTION.

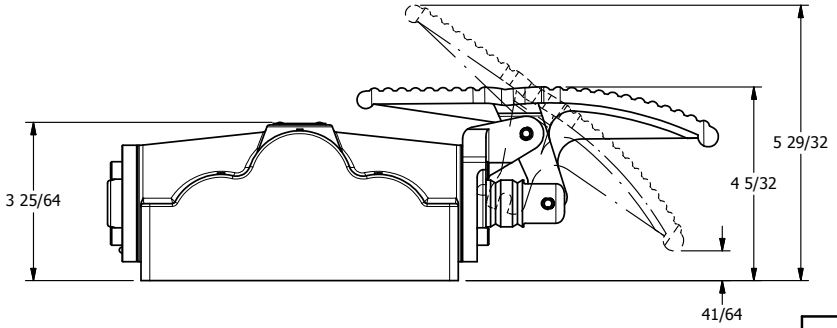

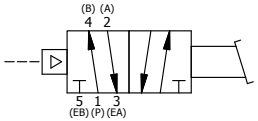

AAA PRODUCTS INTERNATIONAL 7114 Harry Hines Blvd Dallas, TX 75235	TITLE: 1" SUBPLATE, TREADLE, 2 POS, FRICTION POS, PILOT RTRN	PART NO.: DIM_TR8P

THE INFORMATION CONTAINED WITHIN THIS DOCUMENT IS PROPRIETARY TO AAA PRODUCTS AND MAY NOT BE DISCLOSED WITHOUT PRIOR WRITTEN CONSENT